Evaluating the AD5770R with 6-Channel, 14-Bit, Current Output DAC and On-Chip Reference, SPI Interface

FEATURES

- Fully featured evaluation board for the AD5770R
- PC control in conjunction with Analog Devices® Inc., EVAL-SDP-CB1Z system development platform
- PC software for control

EVALUATION KIT CONTENTS

- EVAL-AD5770RSDZ evaluation board
- USB cable

EQUIPMENT NEEDED

- EVAL-SDP-CB1Z (SDP-B) board, board must be purchased separately
- PC running Windows 7 or Windows 10

SOFTWARE NEEDED

- Evaluation software, available for download from the EVAL-AD5770RSDZ product page

DOCUMENTS NEEDED

- AD5770R data sheet

GENERAL DESCRIPTION

The EVAL-AD5770RSDZ is a fully featured evaluation board that is designed to help the user evaluate the AD5770R 6-channel, 14-bit, current output digital-to-analog converter (DAC).

The EVAL-AD5770RSDZ evaluation board is controlled by the following two methods: the on-board P11 connector and the EVAL-SDP-CB1Z (Connector P10). The system development (SDP-B) board uses the AD5770R evaluation software to control the EVAL-AD5770RSDZ evaluation board via a Windows® PC USB port.

The EVAL-AD5770RSDZ board contains a power solution that uses the ADP5073 switching regulator to generate −2 V from a +3.3 V supply and the ADP1741 linear regulator to generate +2 V from a +3.3 V supply. Alternatively, the AD5770R also uses a linear power supply connected through the nine on-board connectors (P0 to P8). The AD5770R incorporates an internal 1.25 V precision reference. The EVAL-AD5770RSDZ board contains an additional 1.25 V, 0.5 ppm/°C voltage reference.

The AD5770R evaluation software provides an intuitive graphic user interface (GUI) that configures and controls the AD5770R over the serial peripheral interface (SPI).

The AD5770R is a 6-channel, 14-bit resolution, low noise, programmable current output DAC for photonics control applications. The output current ranges are software selectable, and channels are routed to the MUX_OUT pin for external monitoring.

See the AD5770R data sheet for full details and consult the AD5770R data sheet in conjunction with this user guide when using the EVAL-AD5770RSDZ board.

EVALUATION BOARD PHOTOGRAPH

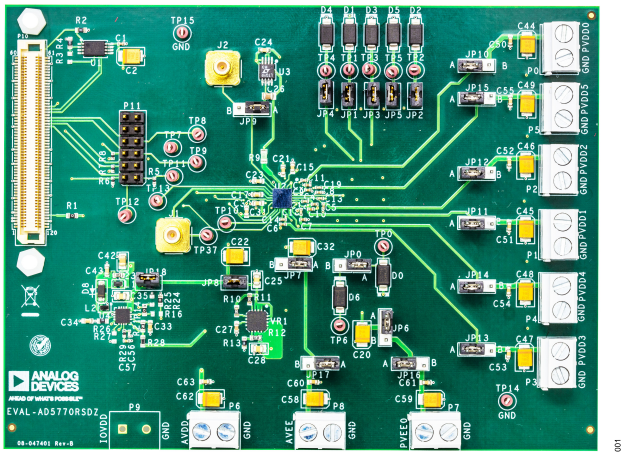

Figure 1.

TABLE OF CONTENTS

Features ... 1
Evaluation Kit Contents ... 1
Equipment Needed ... 1
Software Needed ... 1
Documents Needed ... 1
General Description ... 1
Evaluation Board Photograph ... 1
Evaluation Board Hardware ... 3
  Power Supplies and Link Options ... 3
  Power Solution Option ... 3
  External Power Supply Option ... 3
  On-Board Connectors ... 5
  Connector P11 Pin Descriptions ... 5
  On-Board Reference ... 5
  Multiplexer Output ... 5
  Precision R_{SET} Resistor ... 5
Evaluation Board Software ... 6
  Software Operation ... 6
  Main Window ... 7
  REFERENCE CONFIG ... 7
  CHANNEL CONFIG ... 7
  SET OUTPUT RANGE ... 7
  SET DAC CURRENT ... 7
  LDAC ... 7
  PAGE MASK ... 8
  MONITOR MUX ... 8
  OUTPUT FILTER ... 8
  ALARM ... 8
  STATUS ... 8
  RESET ... 8
  Read All Function ... 8
Evaluation Board Artwork and Schematics ... 9
Ordering Information ... 12
  Bill of Materials ... 12
  Notes ... 13

REVISION HISTORY

8/2025—Rev. B to Rev. C

Changes to Power Solution Option Section ... 3

8/2023—Rev. A to Rev. B

Changes to Figure 18 ... 9

3/2023—Rev. 0 to Rev. A

Changes to External Power Supply Option Section ... 3
Changes to Table 1 ... 3
Changes to Table 4 ... 5
Changes to On-Board Reference Section ... 5
Changes to Figure 19 Caption ... 10
Changes to Figure 20 Caption ... 11

2/2019—Revision 0: Initial Version

EVALUATION BOARD HARDWARE

POWER SUPPLIES AND LINK OPTIONS

The EVAL-AD5770RSDZ board is powered by using the on-board ADP5073 and ADP1741 regulators. Both regulators are powered with a 3.3 V supply through an on-board P6 connector. Power is also supplied to the evaluation board through the nine on-board connectors, P0 to P8. See Figure 2 for a functional block diagram of the on-board connectors.

POWER SOLUTION OPTION

To generate 2 V for the AD5770R pins, PVDD0 to PVDD5, with the on-board ADP1741 regulator, connect JP10, JP11, JP12, JP13, and JP14 to Position B, insert JP8, and connect 3.3 V to P6 (AVDD). To generate −2 V for PVEE0 and AVEE with the ADP5073, connect JP6, JP7, JP16, and JP17 to Position B and insert JP18 while applying an external 3.3 V to P6 (AVDD). To connect PVEE0 and AVEE to 0 V, connect JP6 and JP7 to Position A. See Figure 2 for a diagram of all power connections.

EXTERNAL POWER SUPPLY OPTION

The evaluation board is powered using external supplies. Follow the link connections under the external supply column in Table 1 to connect external voltages to P6 (AVDD), P0 to P5 (PVDD0_EXT to PVDD5_EXT), P7 (PVEE0_EXT), and P8 (AVEE_EXT). Refer to Table 2 for full link options. If the SDP-B board is controlling the EVAL-AD5770RSDZ board, do not apply 3.3 V to the IOVDD pin on P11 or P9. The IOVDD pin of P11 is only powered when the SDP-B is not used. Consult the AD5770R data sheet to determine the safety operating limits for all mentioned devices.

Table 1. Quick Start Link Configuration for Power Solution and Bench Supply

Link	Power Solution	External Supply
JP6	B	B
JP7	B	B
JP8	Inserted	Removed
JP10	B	A
JP11	B	A
JP12	B	A
JP13	B	A
JP14	B	A
JP15	B	A
JP16	B	A
JP17	B	A
JP18	Inserted	Removed

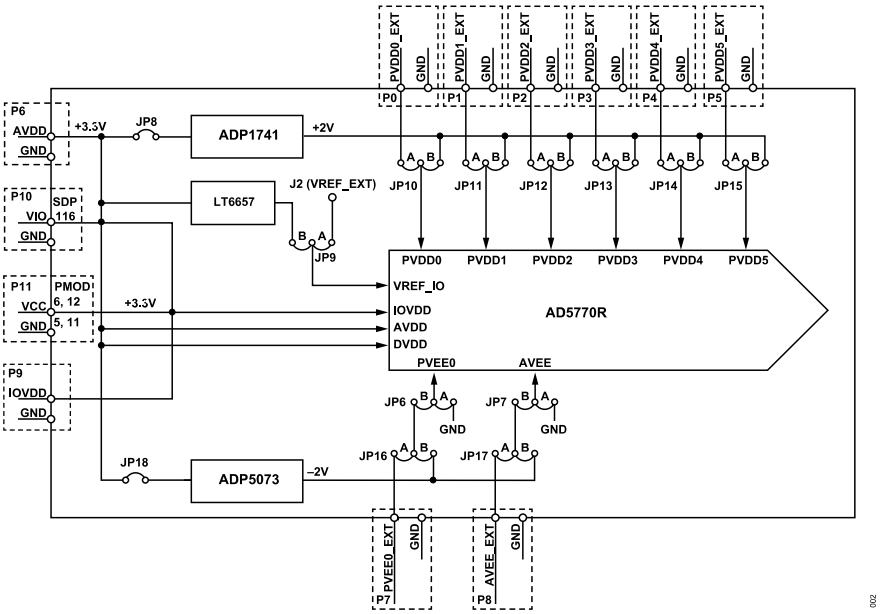

Figure 2. Powering the EVAL-AD5770RSDZ Evaluation Board

EVALUATION BOARD HARDWARE

Table 2. Link Options

Link No.	Description
JP0	Selects the connection of the IDAC0 pin on the AD5770R.
	Position A connects the AD5770R IDAC0 output to GND via D0.
	Position B connects the AD5770R IDAC0 output to TP6 via D6.
JP1	Insert this link to connect the AD5770R IDAC1 output to GND via D1.
JP2	Insert this link to connect the AD5770R IDAC2 output to GND via D2.
JP3	Insert this link to connect the AD5770R IDAC3 output to GND via D3.
JP4	Insert this link to connect the AD5770R IDAC4 output to GND via D4.
JP5	Insert this link to connect the AD5770R IDAC5 output to GND via D5.
JP6	Selects the power supply for PVEE0.
	Position B connects the AD5770R PVEE0 to the on-board −2 V when JP16 is in Position B and JP18 is inserted.
	Position B connects the AD5770R PVEE0 to P7 when JP16 is in Position A.
	Position A connects the AD5770R PVEE0 to GND.
JP7	Selects the power supply for AVEE.
	Position B connects the AD5770R AVEE to the on-board −2 V when JP17 is in Position B and JP18 is inserted.
	Position B connects the AD5770R AVEE to P8 when JP17 is in Position A.
	Position A connects the AD5770R AVEE to GND.
JP8	When inserted, the ADP1741 linear regulator is powered and the regulator output is set to the on-board 2 V.
JP9	External reference control.
	Position B connects the AD5770R VREF_IO pin to the 1.25 V reference voltage.
	Position A connects the AD5770R VREF_IO pin to J2.
JP10	Selects the power supply for PVDD0.
	Position B connects the AD5770R PVDD0 to 2 V.
	Position A connects the AD5770R PVDD0 to Connector P0. Ensure PVDD0 does not exceed AVDD − 0.4 V.
JP11	Selects the power supply for PVDD1.
	Position B connects the AD5770R PVDD1 to the on-board 2 V.
	Position A connects the AD5770R PVDD1 to Connector P1. Ensure PVDD1 does not exceed AVDD − 0.4 V.
JP12	Selects the power supply for PVDD2.
	Position B connects the AD5770R PVDD2 to the on-board 2 V.
	Position A connects the AD5770R PVDD2 to Connector P2. Ensure PVDD2 does not exceed AVDD − 0.4 V.
JP13	Selects the power supply for PVDD3.
	Position B connects the AD5770R PVDD3 to the on-board 2 V.
	Position A connects the AD5770R PVDD3 to Connector P3. Ensure PVDD3 does not exceed AVDD − 0.4 V.
JP14	Selects the power supply for PVDD4.
	Position B connects the AD5770R PVDD4 to the on-board 2 V.
	Position A connects the AD5770R PVDD4 to Connector P4. Ensure PVDD4 does not exceed AVDD − 0.4 V.
JP15	Selects the power supply for PVDD5.
	Position B connects the AD5770R PVDD5 to the on-board 2 V.
	Position A connects the AD5770R PVDD5 to Connector P5. Ensure PVDD5 does not exceed AVDD − 0.4 V.
JP16	Used with JP6 to select the power supply for PVEE0.
	Position B connects the AD5770R PVEE0 to the on-board −2 V when JP6 is in Position B.
	Position A connects the AD5770R PVEE0 to Connector P7 when JP6 is in Position B.
JP17	Used with JP7 to select the power supply for AVEE.
	Position B connects the AD5770R AVEE to the on-board −2 V when JP7 is in Position B.
	Position A connects the AD5770R AVEE to Connector P8 when JP7 is in Position B.
JP18	When inserted, the ADP5073 dc-to-dc inverting regulator is powered and the regulator output is set to the on-board −2 V.

EVALUATION BOARD HARDWARE

ON-BOARD CONNECTORS

Table 3 describes the 13 connectors on the EVAL-AD5770RSDZ board.

Table 3. On-Board Connectors

Connector	Function
P0 to P5	Supplies PVDD0 to PVDD5 pins externally
P6	Supplies AVDD pin externally
P7	Supplies PVEE0 pin externally
P8	Supplies AVEE pin externally
P9	Not inserted
P10	SDP board connector
P11	Digital interface pin header connector (PMOD).
J1	MUX_OUT pin connector
J2	REF_IO pin connector

CONNECTOR P11 PIN DESCRIPTIONS

Figure 3 shows both a peripheral module interface (PMOD) and connections for digital lines that serve as inputs and outputs to and from the external digital controller. Refer to Table 4 for descriptions of each pin number (digital line).

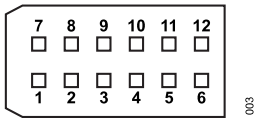

Figure 3. Connector P11 Pin Configuration

Table 4. Connector P11 Pin Descriptions

Pin No.	Mnemonic
1	$\overline{CS}$
2	SDI
3	SDO
4	SCLK
5	GND
6	IOVDD/VCC
7	$\overline{ALARM}$
8	$\overline{RESET}$
9	$\overline{LDAC}$
10	No connection
11	GND
12	IOVDD/VCC

ON-BOARD REFERENCE

The EVAL-AD5770RSDZ board contains the LT6657A-1.25 (1.25 V, 0.5 ppm/°C voltage reference). Place JP9 in Position B to use the LT6657A-1.25 as the reference source for the AD5770R. When using the AD5770R on-chip voltage reference, connect JP9 to Position A (see Figure 2).

MULTIPLEXER OUTPUT

The AD5770R diagnostic features output compliance voltages, output currents, and internal die temperature monitoring. The output compliance voltages and representative voltages of output current and internal die temperature are multiplexed on-chip and are available on the J1 connector (MUX_OUT pin). Refer to the AD5770R data sheet for more details on the multiplexer functionality.

PRECISION R_{SET} RESISTOR

The AD5770R integrates an on-chip 2.5 kΩ (10 ppm/°C, 0.1%) precision resistor that defines the reference current generation. Additionally, the EVAL-AD5770RSDZ board contains an on-board ±0.2 ppm/°C precision resistor that also defines the reference current generation. Refer to the AD5770R data sheet for more details on the precision resistor.

EVALUATION BOARD SOFTWARE

The AD5770R evaluation software controls and configures the AD5770R through a USB port. Take the following steps to set up the evaluation board for initial use:

1. Install the AD5770R evaluation software. Download the evaluation software package from the EVAL-AD5770RSDZ product page and unzip it. Run the **setup.exe** from the unzipped folder and follow the instructions in the folder during the software installation process.
2. After installing the AD5770R evaluation software, connect the SDP-B board to the EVAL-AD5770RSDZ board through Connector A on the SDP-B board.
3. Power up the EVAL-AD5770RSDZ board as described in the Power Supplies and Link Options section. Use the supplied cable to connect the EVAL-AD5770RSDZ board, which is connected to the SDP-B board from the previous step, to the PC USB port. Wait for Windows to recognize the SDP-B board, which users are notified of through a notification in the desktop system tray.
4. Launch the AD5770R evaluation software by following the steps in the Software Operation section.

SOFTWARE OPERATION

To start the software, complete the following steps:

1. From the **Start** menu, click **Analog Devices > AD5770R > AD5770R Evaluation Software**. The main window of the software opens (see Figure 4), and the software recognizes the EVAL-AD5770RSDZ board. The user can identify when the software has recognized the evaluation board by seeing **SDP & Evaluation** in the **Connection** section of the pane in Figure 5.
2. The software opens a window that prompts the user to select an interface (see Figure 4). Connect to the EVAL-AD5770RSDZ board by clicking **SDP & Evaluation Board** and then clicking **Work Online**. To run the software without connecting the EVAL-AD5770RSDZ board, click **Sim Device** and then click **Work Online**. This mode allows users to examine the various tabs in the GUI without communicating with a device.

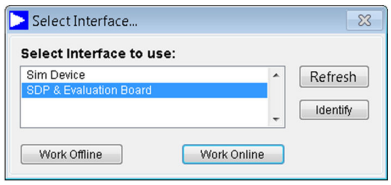

Figure 4. Select Interface Window

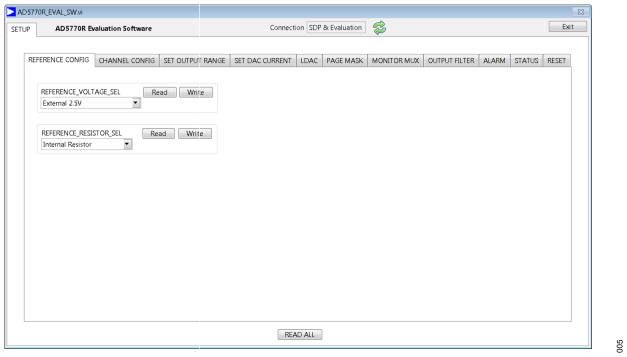

Figure 5. AD5770R Evaluation Software Main Window

EVALUATION BOARD SOFTWARE

MAIN WINDOW

The main window is divided into the following eleven tabs: **REFERENCE CONFIG**, **CHANNEL CONFIG**, **SET OUTPUT RANGE**, **SET DAC CURRENT**, **LDAC, PAGE MASK**, **MONITOR MUX**, **OUTPUT FILTER**, **ALARM, STATUS** and **RESET**.

Read and **Write** buttons are located in all tabs. The **Read** button executes a readback of the respective register, and the **Write** button writes the selected or filled in register contents.

Refer to the AD5770R data sheet for more information on all tab functions and features.

REFERENCE CONFIG

The **REFERENCE CONFIG** tab allows users to select the internal or external reference voltage and the internal or external precision R_{SET} resistor.

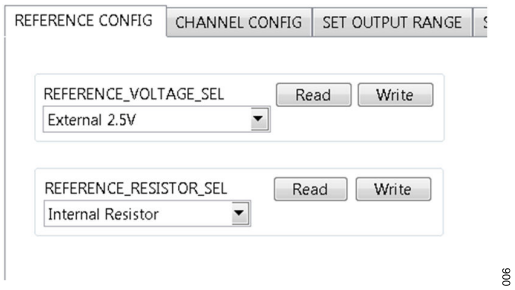

Figure 6. REFERENCE CONFIG Tab

CHANNEL CONFIG

The **CHANNEL CONFIG** tab allows users to enable or disable each AD5770R output.

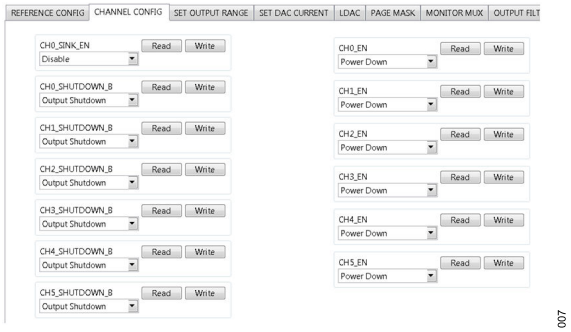

Figure 7. CHANNEL CONFIG Tab

SET OUTPUT RANGE

The **SET OUTPUT RANGE** tab sets the output range of each channel by allowing users to select the available options from the dropdown list of each channel. Additionally, the **SET OUTPUT RANGE** tab can set the output current scaling of each channel. Refer to the AD5770R data sheet for more details on the output current scaling feature.

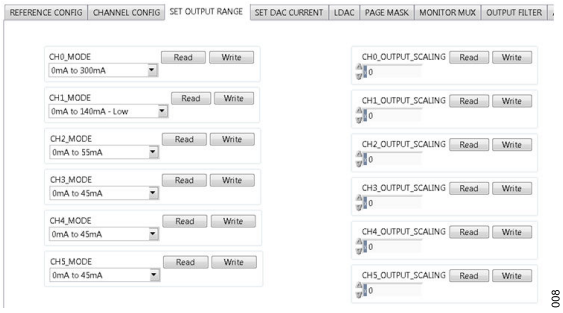

Figure 8. SET OUTPUT Range Tab

SET DAC CURRENT

The **SET DAC CURRENT** tab allows users to set the output current of each channel by writing to the DAC registers. The **SET DAC CURRENT** tab also writes to the input registers by inputting the hex code equivalent to the 14-bit value of the target input register.

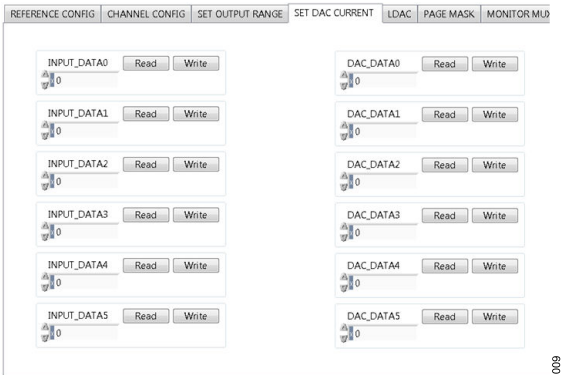

Figure 9. SET DAC Current Tab

LDAC

The **LDAC** tab can issue a software **LDAC** command to each channel. To issue a command, users choose the **Load DAC** command from the dropdown box and then click **Write**. The **LDAC** tab also enables LDAC pin activity (hardware LDAC) to be ignored on any channel. Users can enable the ignore function by selecting the appropriate mask LDAC command from a dropdown box in each channel.

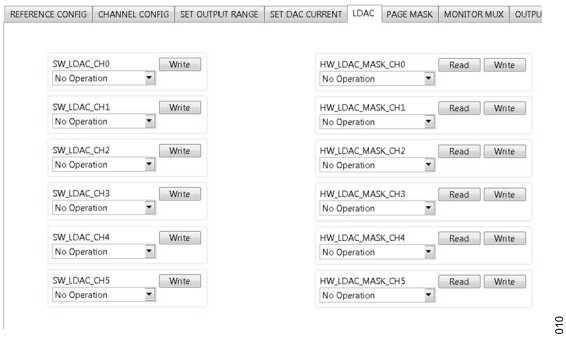

Figure 10. LDAC Tab

EVALUATION BOARD SOFTWARE

PAGE MASK

The **PAGE MASK** tab allows users to write to any combination of DAC and input registers in a single SPI transaction.

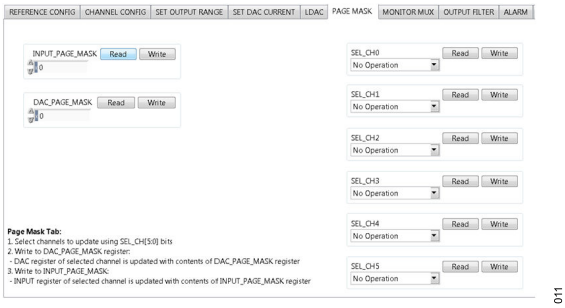

Figure 11. PAGE MASK Tab

MONITOR MUX

The **MONITOR MUX** tab can configure the multiplexer on the AD5770R. Refer to the AD5770R data sheet for more details on the multiplexer functionality.

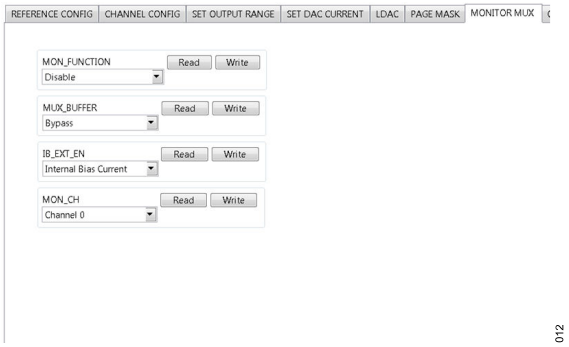

Figure 12. MONITOR MUX Tab

OUTPUT FILTER

The **OUTPUT FILTER** tab allows users to set the output filter resistor for each channel. Refer to the AD5770R data sheet for more details on the output filter.

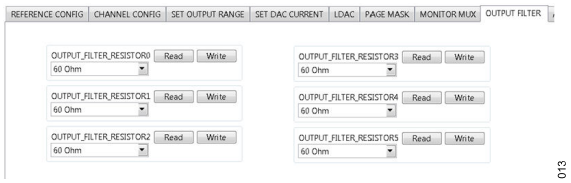

Figure 13. OUTPUT FILTER Tab

ALARM

The **ALARM** tab configures the various alarms on the AD5770R. Refer to the AD5770R data sheet for more details on the alarm function.

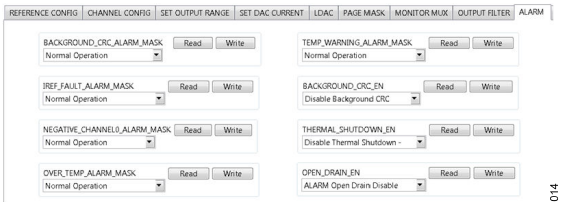

Figure 14. ALARM Tab

STATUS

The **STATUS** tab is a read-only tab that allows the user to read the status register.

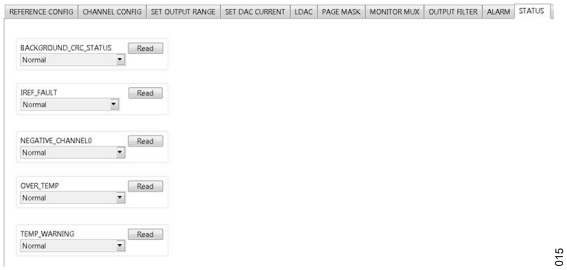

Figure 15. STATUS Tab

RESET

The **RESET** tab can issue a software reset command to place the AD5770R into a power-on state.

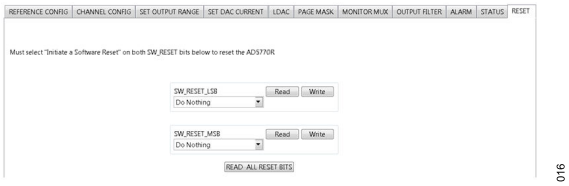

Figure 16. RESET Tab

READ ALL FUNCTION

When clicked, the **READ ALL** button in the main window can read all register contents displayed in the software.

Figure 17. READ ALL Button

EVALUATION BOARD ARTWORK AND SCHEMATICS

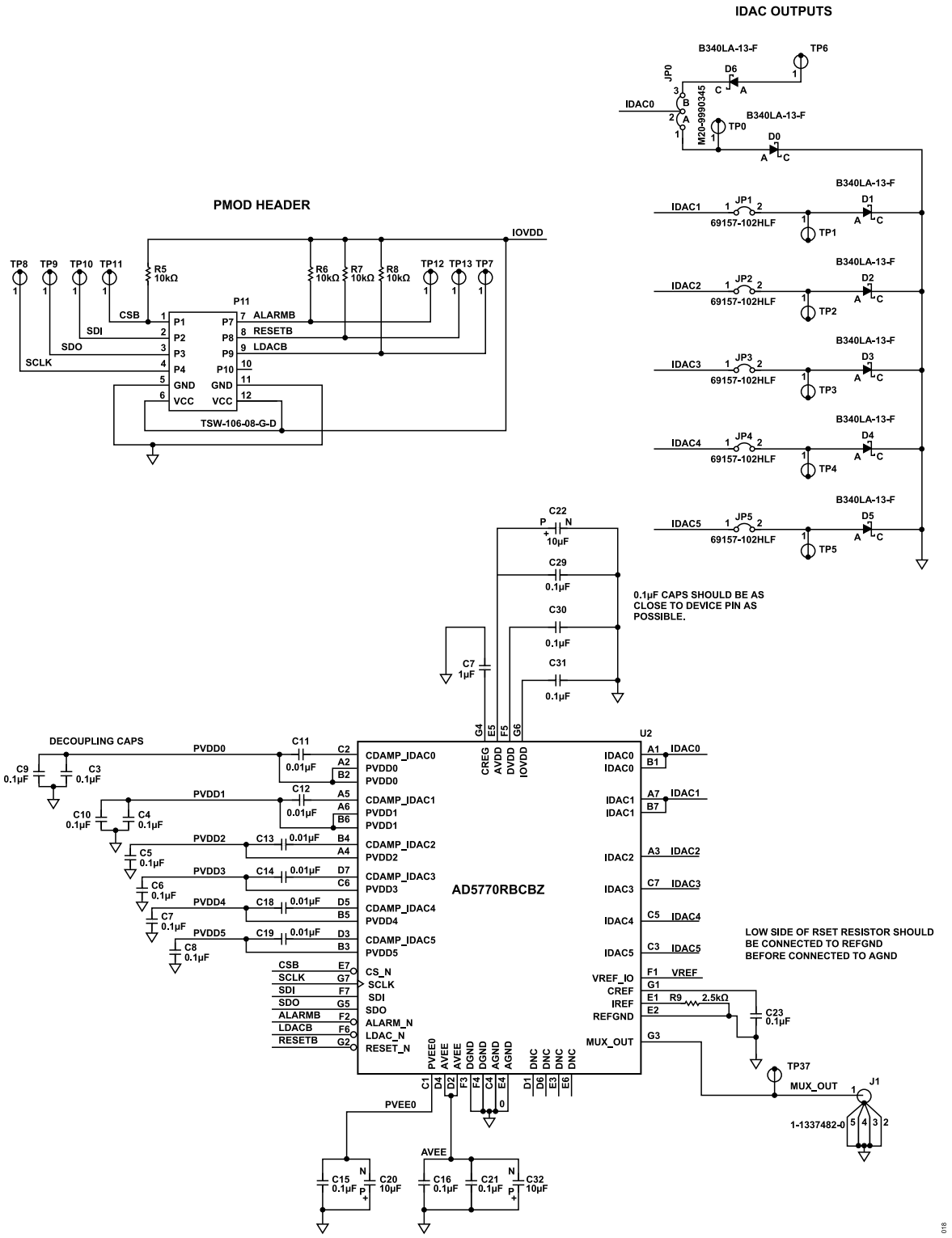

Figure 18. EVAL-AD5770RSDZ Schematics—Main Device and PMOD Connections

EVALUATION BOARD ARTWORK AND SCHEMATICS

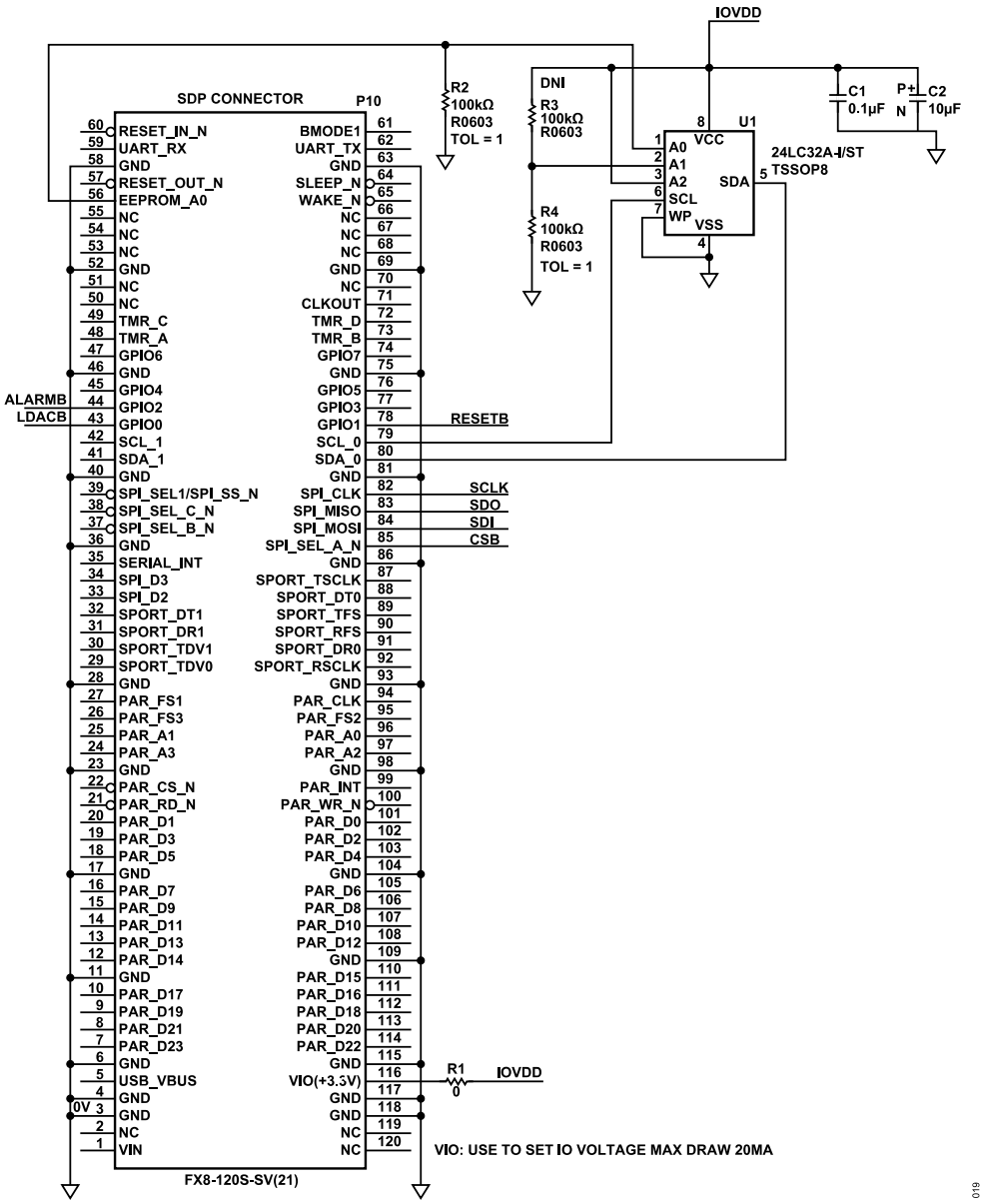

Figure 19. EVAL-AD5770RSDZ Schematic—SDP Interface Connector

EVALUATION BOARD ARTWORK AND SCHEMATICS

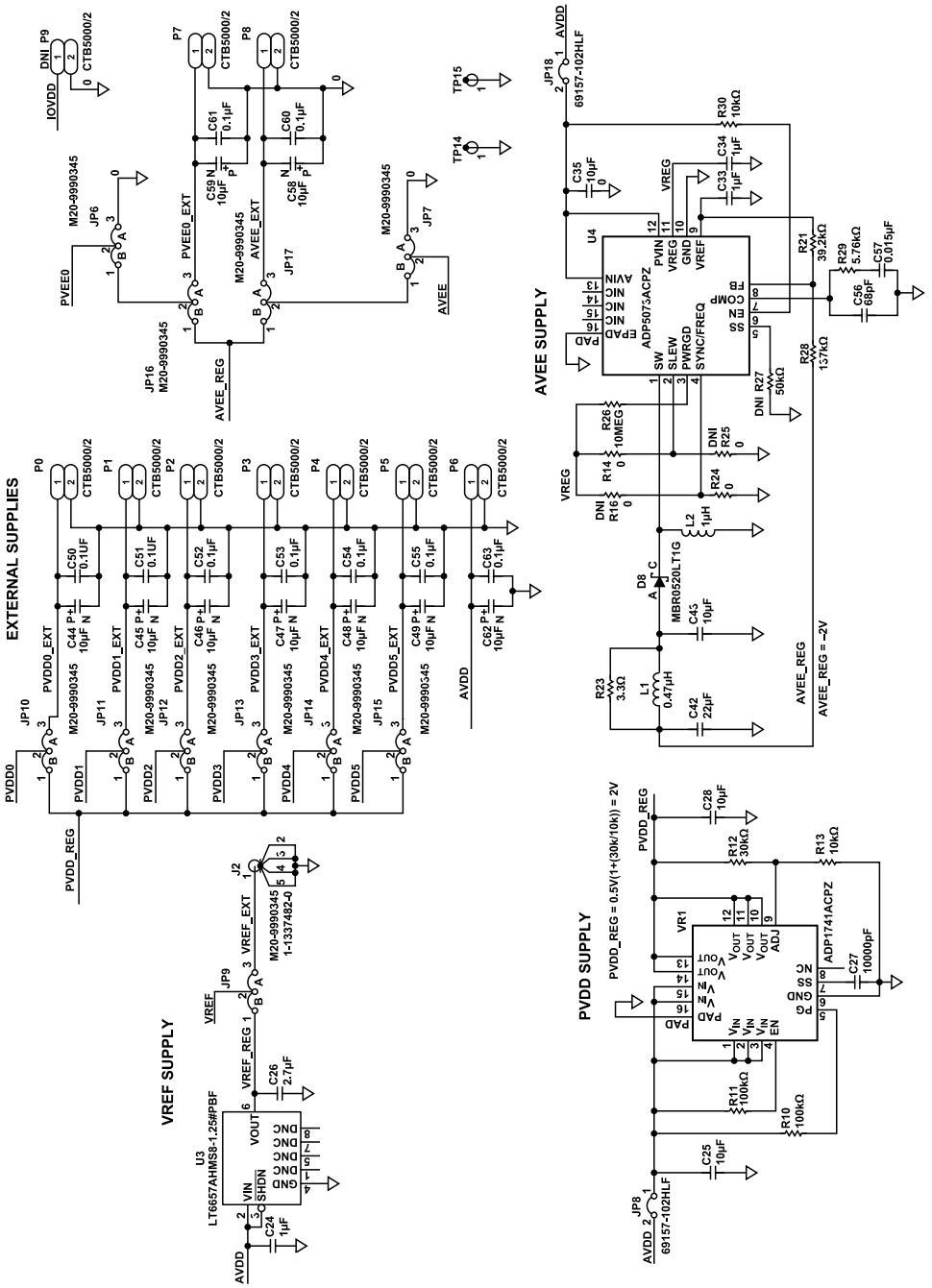

Figure 20. EVAL-AD5770RSDZ Schematic—Supplies and Power Links

ORDERING INFORMATION

BILL OF MATERIALS

Table 5. Bill of Materials

Qty	Reference Designator	Description	Manufacturer	Part Number
1	U1	32K, I²C EEPROM	Microchip Technology	24LC32A-I/ST
1	U2	6-channel, 13-bit, current output DAC	Analog Devices, Inc.	AD5770RBCBZ
1	U3	1.25 V low noise, buffered reference	Analog Devices, Inc.	LT6657AHMS8-1.25#PBF
1	U4	DC to dc inverting regulator	Analog Devices, Inc.	ADP5073ACPZ-R7
1	VR1	Low dropout, adjustable output Linear regulator	Analog Devices, Inc.	ADP1741ACPZ-R7
9	C1, C3 to C10	Ceramic capacitors, 0.1 µF, 16 V, X7R, 0402	Murata	GRM155R71C104KA88D
6	C11 to C14, C18, C19	Ceramic capacitors, 10 µF, 25 V, X5R, 0402	AVX	04023D103KAT2A
7	C15, C16, C21, C23, C29, C30, C31	Ceramic capacitors, 0.1 µF, 16 V, X7R, 0603	Kemet	C0603C104K4RAC
4	C17, C24, C33, C34	Ceramic capacitors, 1 µF, 16 V, X5R, 0603	Murata	GRM188R61C105KA93D
13	C2, C20, C22, C32, C44 to C48, C58, C59, C62	Tantalum capacitors, 10 µF, 10%, 16 V, 1411	Kemet	TAJB106K016RNJ
3	C25, C28, C35	Ceramic capacitors, 10 µF, 16 V, X5R, 0805	Murata	GRM21BR61C106KE15L
1	C26	Ceramic capacitor, 2.7 µF, 10 V, X5R, 0805	Kemet	C0805C275K8PACTU
1	C27	Ceramic capacitor, 10 µF, 25 V, X7R, 0603	TDK	C1608X7R1E103K
1	C42	Ceramic capacitor, 22 µF, 6.3 V, X5R, 0805	Murata	GRM21BR60J226ME39L
1	C43	Ceramic capacitor, 22 µF, 6.3 V, X5R, 0805	Murata	GRM188R60J106ME47D
9	C50 to C55, C60, C61, C63	Ceramic capacitors, 0.1 µF, 25 V, X7R, 0603	Kemet	C0603C104K3RACTU
1	C56	Ceramic capacitor, 68 pF, 50 V, C0G/NP0, 0402	Murata	GRM1555C1H680JA01D
1	C57	Ceramic capacitor, 15 nF, 16 V, X7R, 0402	Murata	GRM155R71C153KA01D
7	D0 to D6,	Schottky diodes, 40 V, 3 A, SMA	Diodes Inc.	B340LA-13-F
1	D8	Schottky diode, 20 V, 500 MA, SOD123	ON Semiconductor	MBR0520LT1G
2	J1, J2	SMB connectors	TE Connectivity Ltd	1-1337482-0
12	JP0, JP6, JP7, JP9, JP10 to JP17	3-pin male headers, 2.54 mm pitch	Harwin	M20-9990345
7	JP1 to JP5, JP8, JP18	2-pin male headers, 2.54 mm pitch	Amphenol FCI	69157-102HLF
1	L1	Inductor shielded power, 1.3 A, 0.1 Ω dc resistance (DCR)	Coilcraft, Inc.	PFL1609-471MEU
1	L2	Inductor shielded power, 0.23 Ω DCR, 0.85 A	Coilcraft, Inc.	PFL1609-102MEU
9	P0 to P8	Terminal blocks, 0.5 mm pitch	CamdenBoss Ltd.	CTB5000/2
1	P10	SDP connector	HRS	FX8-120S-SV(21)
1	P11	12-pin male header, 2.54 mm pitch, PMOD connector	SAMTEC	TSW-106-08-G-D
3	R1, R14, R24	Resistors, SMD, 0 Ω, 1%, 1/16 W, 0603, thick film	Multicomp	MC0603WG00000T5E-TC
2	R10, R11	Resistors, SMD, 100 kΩ, 5%, 1/10 W, 0603, thick film	Yageo	RC0603JR-07100KL
1	R12	Resistor, SMD, 30 kΩ, 0.1%, 1/10 W, 0603, thin film	Panasonic	ERA-3AEB303V
2	R13, R30	Resistors, SMD, 10 kΩ, 1%, 1/10 W, 0603, thick film	Panasonic	ERJ-3EKF1002V
2	R2, R4	Resistors, SMD, 100 kΩ, 1%, 1/10 W, 0603, thick film	Panasonic	ERJ-3EKF1003V
1	R21	Resistor, SMD, 39.2 kΩ, 1%, 1/10 W, 0603, thick film	Yageo	RC0603FR-0739K2L
1	R23	Resistor, SMD, 3.3 Ω, 1%, 1/16 W, 0603, thick film	Multicomp	MC 0.063W 0603 1% 3R3
1	R26	Resistor, SMD, 10 mΩ, 5%, 1/10 W, 0603, thick film	ROHM	MCR03EZPJ106
1	R28	Resistor, SMD, 137 kΩ, 1%, 1/16 W, 0603, thick film	Multicomp	MC0063W06031137K
1	R29	Resistor, SMD, 5.76 kΩ, 1%, 1/10 W, 0402, thick film	Panasonic	ERJ-2RKF5761X
4	R5 to R8	Resistors, SMD, 10 kΩ, 5%, 1/16 W, 0402, thick film	Vishay	CRCW040210K0JNED
1	R9	Resistor, SMD, 2.5 kΩ, 0.01%, 1/5 W, 0805, metal foil	Vishay	Y16242K50000T9R
17	TP0 to TP15, TP37	Test points red	Components Corporation	TP-104-01-02

ORDERING INFORMATION

NOTES

I^2C refers to a communications protocol originally developed by Philips Semiconductors (now NXP Semiconductors).

ESD Caution

ESD (electrostatic discharge) sensitive device. Charged devices and circuit boards can discharge without detection. Although this product features patented or proprietary protection circuitry, damage may occur on devices subjected to high energy ESD. Therefore, proper ESD precautions should be taken to avoid performance degradation or loss of functionality.

Legal Terms and Conditions

By using the evaluation board discussed herein (together with any tools, components documentation or support materials, the "Evaluation Board"), you are agreeing to be bound by the terms and conditions set forth below ("Agreement") unless you have purchased the Evaluation Board, in which case the Analog Devices Standard Terms and Conditions of Sale shall govern. Do not use the Evaluation Board until you have read and agreed to the Agreement. Your use of the Evaluation Board shall signify your acceptance of the Agreement. This Agreement is made by and between you ("Customer") and Analog Devices, Inc. ("ADI"), with its principal place of business at One Analog Way, Wilmington, MA 01887-2356, U.S.A. Subject to the terms and conditions of the Agreement, ADI hereby grants to Customer a free, limited, personal, temporary, non-exclusive, non-sublicensable, non-transferable license to use the Evaluation Board FOR EVALUATION PURPOSES ONLY. Customer understands and agrees that the Evaluation Board is provided for the sole and exclusive purpose referenced above, and agrees not to use the Evaluation Board for any other purpose. Furthermore, the license granted is expressly made subject to the following additional limitations: Customer shall not (i) rent, lease, display, sell, transfer, assign, sublicense, or distribute the Evaluation Board; and (ii) permit any Third Party to access the Evaluation Board. As used herein, the term "Third Party" includes any entity other than ADI, Customer, their employees, affiliates and in-house consultants. The Evaluation Board is NOT sold to Customer; all rights not expressly granted herein, including ownership of the Evaluation Board, are reserved by ADI. CONFIDENTIALITY. This Agreement and the Evaluation Board shall all be considered the confidential and proprietary information of ADI. Customer may not disclose or transfer any portion of the Evaluation Board to any other party for any reason. Upon discontinuation of use of the Evaluation Board or termination of this Agreement, Customer agrees to promptly return the Evaluation Board to ADI. ADDITIONAL RESTRICTIONS. Customer may not disassemble, decompile or reverse engineer chips on the Evaluation Board. Customer shall inform ADI of any occurred damages or any modifications or alterations it makes to the Evaluation Board, including but not limited to soldering or any other activity that affects the material content of the Evaluation Board. Modifications to the Evaluation Board must comply with applicable law, including but not limited to the RoHS Directive. TERMINATION. ADI may terminate this Agreement at any time upon giving written notice to Customer. Customer agrees to return to ADI the Evaluation Board at that time. LIMITATION OF LIABILITY. THE EVALUATION BOARD PROVIDED HEREUNDER IS PROVIDED "AS IS" AND ADI MAKES NO WARRANTIES OR REPRESENTATIONS OF ANY KIND WITH RESPECT TO IT. ADI SPECIFICALLY DISCLAIMS ANY REPRESENTATIONS, ENDORSEMENTS, GUARANTEES, OR WARRANTIES, EXPRESS OR IMPLIED, RELATED TO THE EVALUATION BOARD INCLUDING, BUT NOT LIMITED TO, THE IMPLIED WARRANTY OF MERCHANTABILITY, TITLE, FITNESS FOR A PARTICULAR PURPOSE OR NONINFRINGEMENT OF INTELLECTUAL PROPERTY RIGHTS. IN NO EVENT WILL ADI AND ITS LICENSORS BE LIABLE FOR ANY INCIDENTAL, SPECIAL, INDIRECT, OR CONSEQUENTIAL DAMAGES RESULTING FROM CUSTOMER'S POSSESSION OR USE OF THE EVALUATION BOARD, INCLUDING BUT NOT LIMITED TO LOST PROFITS, DELAY COSTS, LABOR COSTS OR LOSS OF GOODWILL. ADI'S TOTAL LIABILITY FROM ANY AND ALL CAUSES SHALL BE LIMITED TO THE AMOUNT OF ONE HUNDRED US DOLLARS ($100.00). EXPORT. Customer agrees that it will not directly or indirectly export the Evaluation Board to another country, and that it will comply with all applicable United States federal laws and regulations relating to exports. GOVERNING LAW. This Agreement shall be governed by and construed in accordance with the substantive laws of the Commonwealth of Massachusetts (excluding conflict of law rules). Any legal action regarding this Agreement will be heard in the state or federal courts having jurisdiction in Suffolk County, Massachusetts, and Customer hereby submits to the personal jurisdiction and venue of such courts. The United Nations Convention on Contracts for the International Sale of Goods shall not apply to this Agreement and is expressly disclaimed. All Analog Devices products contained herein are subject to release and availability.

©2019-2025 Analog Devices, Inc. All rights reserved. Trademarks and registered trademarks are the property of their respective owners.
One Analog Way, Wilmington, MA 01887-2356, U.S.A.