ZMCT204D Current Transformer

Small size, high accuracy, food consistency, for current and power measurement

Structural parameters：

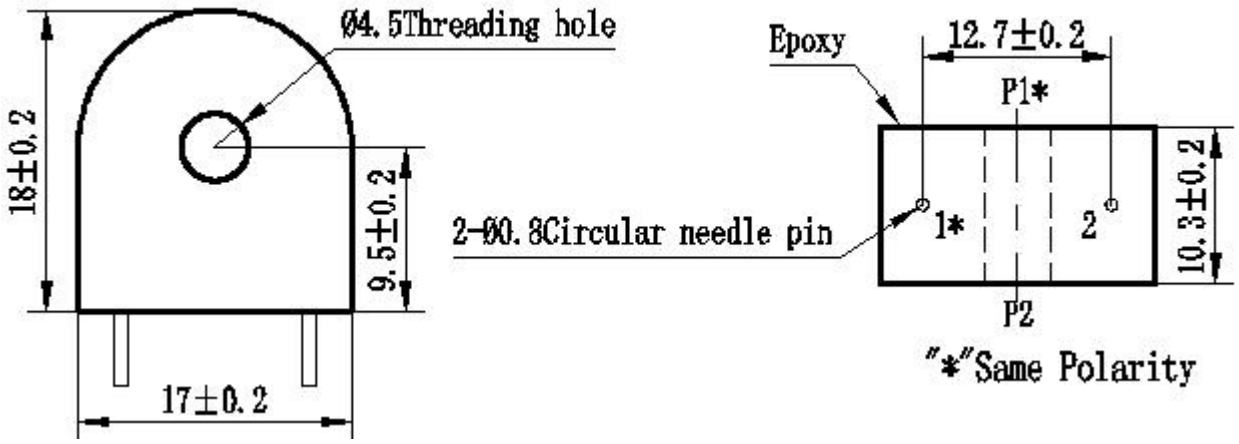

Front view **Bottom view**

The main technical parameters：

Model	ZMCT204D
input current	0~10A（sampling resistor 50Ω）
Rated output current	5mA at input 5A
turns ratio	1000:1
phase angle error	≤15′ （input 1A，sampling resistor 50Ω）
Accuracy class	0.2
linearity	≤0.2%（5%dot~120%dot）
Ratio error	-0.2%≤f≤+0.2%（input 1A，sampling resistor 50Ω）
isolation voltage	4500V
application	current and power measurement
Encapsulation	Epoxy
installation	PCB mounting （Pin Length>3mm）
operating temperature	-40℃~+85℃

Usage direction：

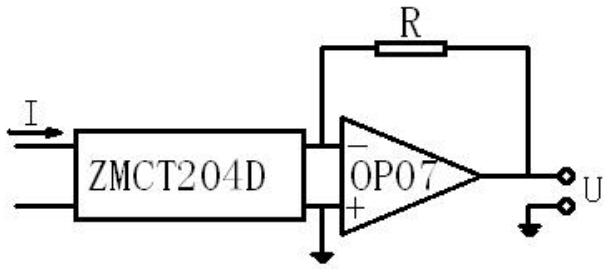

Figure Ⅰ

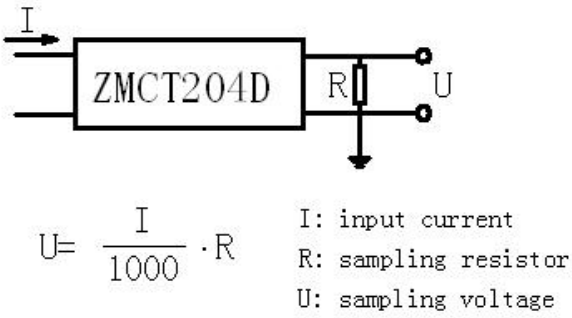

Figure Ⅱ

1. The typical usage of the product is for the active output （Figure Ⅰ）. R is a sampling resistor.
2. The product can be directly through the resistance sampling , easy to use (Figure Ⅱ).