ZMCT102 Current Transformer

Small size，high accuracy，good consistency，for current and power measurement

Structural parameter：

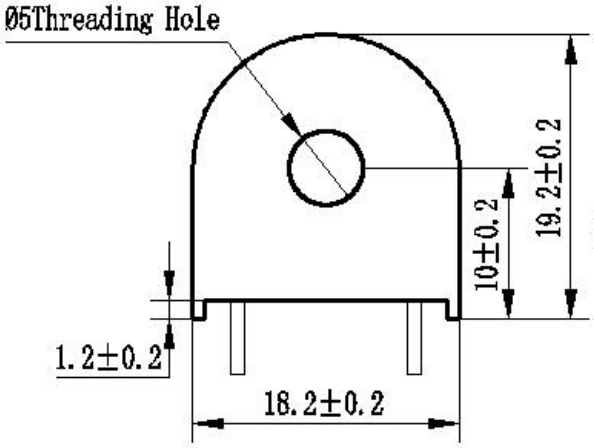

Front view

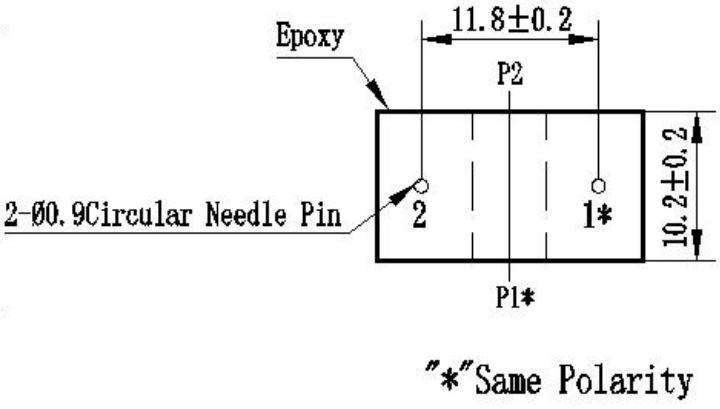

Bottom view

The main technical parameters：

Model	ZMCT102
input current	0-20A（100Ω）
Output current	2.5mA at 5A
turns ratio	2000:1
phase angle error	≤20′ （input 1A，sampling resistor 100Ω）
linearity	0.2%（5%dot~120%dot of 5A）
Permissible error	-0.2%≤f≤+0.2% （input 1A，sampling resistor 100Ω）
application	current and power measurement
isolation voltage	4500V
Encapsulation	Epoxy
installation	PCB mounting（Pin length>3mm）
operating temperature	-40℃~+85℃

Direction for use：

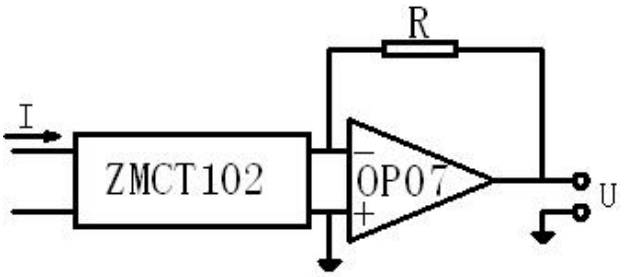

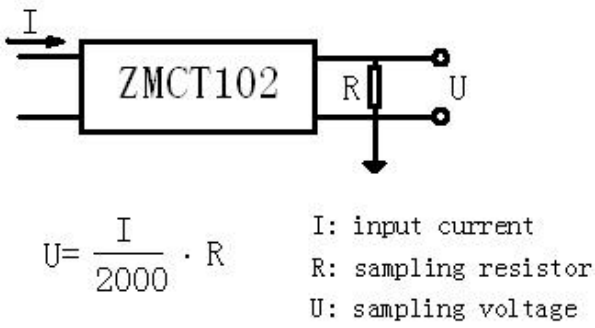

Figure Ⅰ **Figure Ⅱ**

1. The typical usage of the product is for the active output (Figure Ⅰ) . R is a sampling resistor
2. The product can be directly through the resistance sampling , easy to use (Figure Ⅱ).