ZEMCT131 Precise current transformer

Small size, high accuracy, good consistency，Applied to the power frequency 50(60)Hz multifunction meter

Structural parameter：

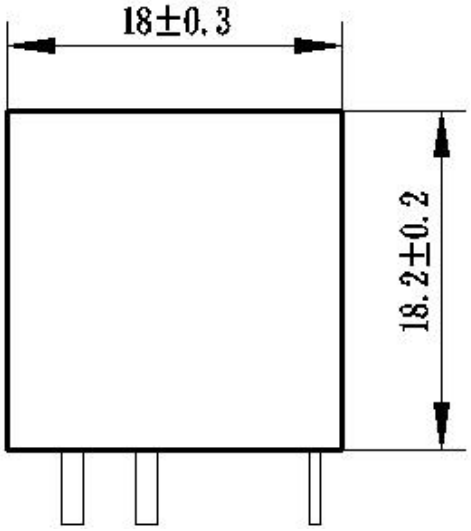

Front view

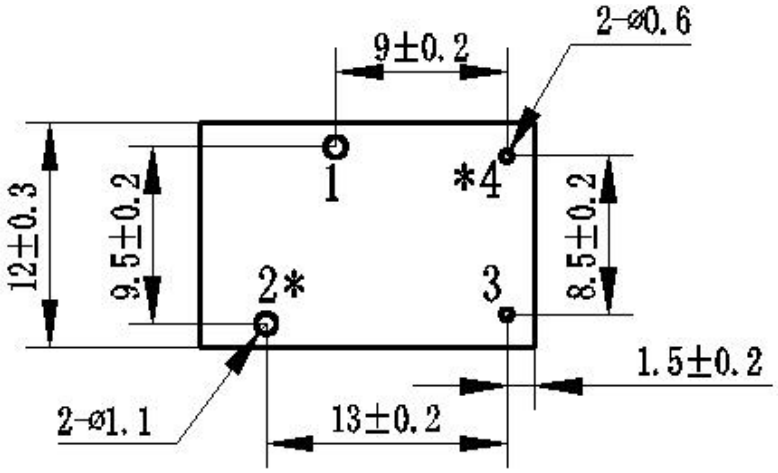

Input: 1、2pins，output : 3、4pins
Same plority (*)

Bottom view

Main technical parameters：

Model	ZEMCT131
input current	0~20A（100Ω）
Rated output current	2.5mA at input 5A
Turns ratio	2000:1
Phase angle error	≤20′ （Input 1A，sampling resistor 100Ω）
Continuous Current range	**0~6A**
Linearity	0.2%(5%dot~120%dot)
Permissible error	-0.2%≤f≤+0.2%（Input 1A，sampling resistor 100Ω)
Isolation voltage	3000V
application	Accurate measurement of current and power
Installation	PCB mounting（Pin length>3mm）
encapsulation	Epoxy
Operating temperature	-40℃~+85℃

Instructions for use：

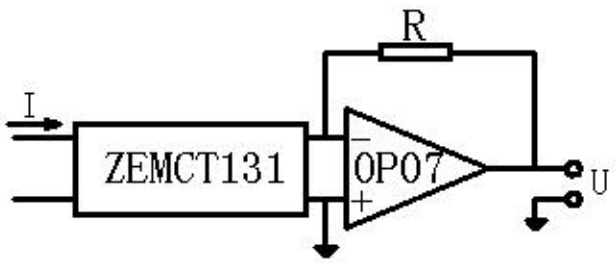

Figure Ⅰ

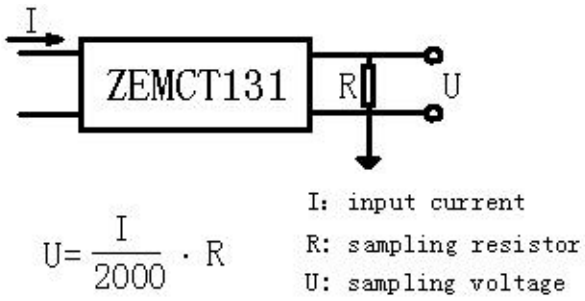

$$U = \frac{I}{2000} \cdot R$$

Figure Ⅱ

1. The typical usage of the product is for the active output (Figure Ⅰ) . R is a sampling resistor.
2. The product can be directly through the resistance sampling , easy to use (Figure Ⅱ).