SN74LV174A Hex D-Type Flip-Flops With Clear

1 Features

- V_{CC} operation of 2 V to 5.5
- Maximum t_{pd} of 7.5 ns at 5 V
- Typical V_{OLP} (output ground bounce) < 0.8 V at V_{CC} = 3.3 V, T_A = 25°C
- Typical V_{OHV} (output V_{OH} undershoot) > 2.3 V at V_{CC} = 3.3 V, T_A = 25°C
- I_{off} supports partial-power-down mode operation
- Supports mixed-mode voltage operation on all ports
- Latch-up performance exceeds 250 mA per JESD 17

2 Applications

- Output expansion
- LED matrix control
- 7-segment display control

3 Description

The 'LV174A devices are hex D-type flip-flops designed for 2 V to 5.5 V V_{CC} operation.

Package Information(1)

PART NUMBER	PACKAGE	BODY SIZE (NOM)
SN74LV174A	DGV (TVSOP, 16)	4.00 mm × 3.50 mm
	PW (TSSOP, 16)	5.00 mm × 4.40 mm
	NS (SO, 16)	10.20 mm × 5.30 mm
	D (SOIC, 16)	9.00 mm × 3.90 mm

(1) For all available packages, see the orderable addendum at the end of the data sheet.

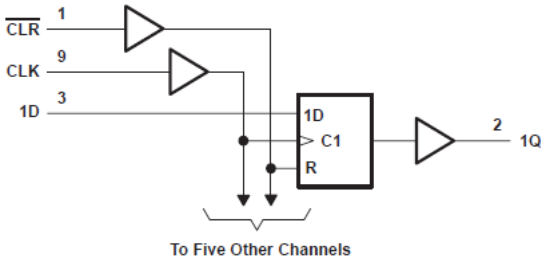

Logic Diagram (Positive Logic)

An IMPORTANT NOTICE at the end of this data sheet addresses availability, warranty, changes, use in safety-critical applications, intellectual property matters and other important disclaimers. UNLESS OTHERWISE NOTED, this document contains PRODUCTION DATA.

Table of Contents

1 Features....1
2 Applications....1
3 Description....1
4 Revision History....2
5 Pin Configuration and Functions....3
6 Specifications....4
6.1 Absolute Maximum Ratings....4
6.2 ESD Ratings....4
6.3 Recommended Operating Conditions....5
6.4 Thermal Information....5
6.5 Electrical Characteristics....6
6.6 Timing Requirements, V_{CC} = 2.5 V ± 0.2 V....6
6.7 Timing Requirements, V_{CC} = 3.3 V ± 0.3 V....7
6.8 Timing Requirements, V_{CC} = 5 V ± 0.5 V....7
6.9 Switching Characteristics, V_{CC} = 2.5 V ± 0.2 V....8
6.10 Switching Characteristics, V_{CC} = 3.3 V ± 0.3 V....8
6.11 Switching Characteristics, V_{CC} = 5 V ± 0.5 V....8
6.12 Noise Characteristics....8
6.13 Operating Characteristics....9
6.14 Typical Characteristics....9
7 Parameter Measurement Information....10
8 Detailed Description....11
8.1 Overview....11
8.2 Functional Block Diagram....11
8.3 Feature Description....12
8.4 Device Functional Modes....13
9 Application and Implementation....14
9.1 Application Information....14
9.2 Typical Application....14
9.3 Power Supply Recommendations....14
9.4 Layout....14
10 Device and Documentation Support....16
10.1 Documentation Support....16
10.2 Receiving Notification of Documentation Updates....16
10.3 Support Resources....16
10.4 Trademarks....16
10.5 Electrostatic Discharge Caution....16
10.6 Glossary....16
11 Mechanical, Packaging, and Orderable Information....16

4 Revision History

NOTE: Page numbers for previous revisions may differ from page numbers in the current version.

Changes from Revision H (December 2022) to Revision I (March 2023)	Page
• Removed references to DB package, removed pinout image of BQB or RGY package, and updated structural layout of document to current standard	1
• Updated thermal values for D package from RθJA = 73 to 107.7, all values in °C/W	5

Changes from Revision G (April 1998) to Revision H (December 2022)	Page
• Updated the format of tables, figures, and cross-references throughout the document	1

Copyright © 2023 Texas Instruments Incorporated

5 Pin Configuration and Functions

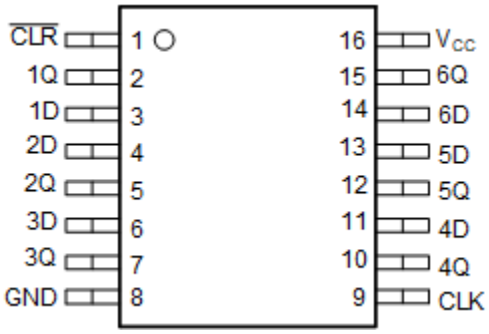

Figure 5-1. D, DW, or PW Package, 16-Pin SOIC, SOP or TSSOP (Top View)

Table 5-1. Pin Functions

PIN		TYPE	DESCRIPTION
NAME	NO.		
$\overline{CLR}$	1	I	Clear Pin
1Q	2	O	1Q Output
1D	3	I	1D Input
2D	4	I	2D Input
2Q	5	O	2Q Output
3D	6	I	3D Input
3Q	7	O	3Q Output
GND	8	—	Ground Pin
CLK	9	I	Clock Pin
4Q	10	O	4Q Output
4D	11	I	4D Input
5Q	12	O	5Q Output
5D	13	I	5D Input
6D	14	I	6D Input
6Q	15	O	6Q Output
V_{CC}	16	P	Power Pin

Copyright © 2023 Texas Instruments Incorporated

6 Specifications

6.1 Absolute Maximum Ratings

over operating free-air temperature range (unless otherwise noted)(1)

			MIN	MAX	UNIT
V_{CC}	Supply voltage range		–0.5	7	V
V_I	Input voltage range(2)		–0.5	7	V
V_O	Voltage range applied to any output in the high-impedance or power-off state(2)		–0.5	7	V
V_O	Output voltage range applied in the high or low state(2) (3)		–0.5	V_{CC} + 0.5	V
I_{IK}	Input clamp current	V_I < 0		–20	mA
I_{OK}	Output clamp current	V_O < 0		–50	mA
I_O	Continuous output current	V_O = 0 to V_{CC}		±25	mA
	Continuous current through V_{CC} or GND			±50	mA
T_{stg}	Storage temperature range		−65	150	°CW

(1) Stresses beyond those listed under *Absolute Maximum Ratings* may cause permanent damage to the device. These are stress ratings only, and functional operation of the device at these or any other conditions beyond those indicated under *Recommended Operating Conditions* is not implied. Exposure to absolute-maximum-rated conditions for extended periods may affect device reliability.
(2) The input and output negative-voltage ratings may be exceeded if the input and output damp current ratings are observed.
(3) This value is limited to 5.5 V maximum.

6.2 ESD Ratings

			VALUE	UNIT
$V_{(ESD)}$	Electrostatic discharge	Human-body model (HBM), per ANSI/ESDA/JEDEC JS-001 (1)	±2000	V
		Machine Model (MM), per JEDEC specification	±200	
		Charged-device model (CDM), per ANSI/ESDA/JEDEC JS-002 (2)	±1000	

(1) JEDEC document JEP155 states that 500-V HBM allows safe manufacturing with a standard ESD control process.
(2) JEDEC document JEP157 states that 250-V CDM allows safe manufacturing with a standard ESD control process.

Copyright © 2023 Texas Instruments Incorporated

6.3 Recommended Operating Conditions

over operating free-air temperature range (unless otherwise noted)(1)

			MIN	MAX	UNIT
V_{CC}	Supply voltage		2	5.5	V
V_{IH}	High-level input voltage	V_{CC} = 2 V	1.5		V
		V_{CC} = 2.3 V to 2.7 V	V_{CC} × 0.7		
		V_{CC} = 3 V to 3.6 V	V_{CC} × 0.7		
		V_{CC} = 4.5 V to 5.5 V	V_{CC} × 0.7		
V_{IL}	Low-level input voltage	V_{CC} = 2 V		0.5	V
		V_{CC} = 2.3 V to 2.7 V		V_{CC} × 0.3	
		V_{CC} = 3 V to 3.6 V		V_{CC} × 0.3	
		V_{CC} = 4.5 V to 5.5 V		V_{CC} × 0.3	
V_I	Input voltage		0	5.5	V
V_O	Output voltage	High or low state	0	V_{CC}	V
I_{OH}	High-level output current	V_{CC} = 2 V		–50	μA
		V_{CC} = 2.3 V to 2.7 V		–2	mA
		V_{CC} = 3 V to 3.6 V		–6	
		V_{CC} = 4.5 V to 5.5 V		–12	
I_{OL}	Low-level output current	V_{CC} = 2 V		50	μA
		V_{CC} = 2.3 V to 2.7 V		2	mA
		V_{CC} = 3 V to 3.6 V		6	
		V_{CC} = 4.5 V to 5.5 V		12	
Δt/Δv	Input transition rise or fall rate	V_{CC} = 2.3 V to 2.7 V		200	ns/V
		V_{CC} = 3 V to 3.6 V		100	
		V_{CC} = 4.5 V to 5.5 V		20	
T_A	Operating free-air temperature		–40	85	°C

(1) All unused inputs of the device must be held at V_{CC} or GND to ensure proper device operation. Refer to the TI application report, *Implications of Slow or Floating CMOS Inputs*.

6.4 Thermal Information

THERMAL METRIC(1)		SN74LV174A				UNIT
		D	DGV	NS	PW	
		16 PINS				
$R_{\theta JA}$	Junction-to-ambient thermal resistance	107.7	120	64	108	°C/W

(1) For more information about traditional and new thermal metrics, see the *IC Package Thermal Metrics* application report (SPRA953).

Copyright © 2023 Texas Instruments Incorporated

6.5 Electrical Characteristics

over recommended operating free-air temperature range (unless otherwise noted)

PARAMETER	TEST CONDITIONS	V_{CC}	SN74LV174A			UNIT
			MIN	TYP	MAX	
V_{OH}	I_{OH} = –50 µA	2 V to 5.5 V	V_{CC} – 0.1			V
	I_{OH} = –2 mA	2.3 V	2			
	I_{OH} = –6 mA	3 V	2.48			
	I_{OH} = –12 mA	3 V	3.8		0.1	
		4.5 V			0.4	
		4.5 V			0.44	
V_{OL}	I_{OL} = 50 µA	2 V to 5.5 V			0.1	V
	I_{OL} = 2 mA	2.3 V			0.4	
	I_{OL} = 6 mA	3 V			0.44	
	I_{OL} = 12 mA	4.5			0.55	
I_I	V_I = 5.5 V or GND	0 V to 5.5 V			±1	µA
I_{CC}	V_I = V_{CC} or GND, I_O = 0	5.5 V			20	µA
I_{off}	V_I or V_O = 0 to 5.5 V	0 V			5	µA
C_i	V_I = V_{CC} or GND	3.3 V		1.7		pF

6.6 Timing Requirements, V_{CC} = 2.5 V ± 0.2 V

over recommended operating free-air temperature range (unless otherwise noted)

			T_A = 25°C		SN74LV174A		UNIT
			MIN	MAX	MIN	MAX	
t_w	Pulse duration	$\overline{CLR}$ low	6		6.5		ns
		CLK high or low	7		7		
t_{su}	Setup time before CLK↑	Data	8.5		9.5		ns
		$\overline{CLR}$ inactive	4		4		
t_h	Hold time data after CLK↑		− 0.5		0		ns

Copyright © 2023 Texas Instruments Incorporated

6.7 Timing Requirements, V_{CC} = 3.3 V ± 0.3 V

over recommended operating free-air temperature range (unless otherwise noted)

			T_A = 25°C		SN74LV174A		UNIT
			MIN	MAX	MIN	MAX	
t_w	Pulse duration	$\overline{CLR}$ low	5		5		ns
		CLK high or low	5		5		
t_{su}	Setup time before CLK↑	Data	5		6		ns
		$\overline{CLR}$ inactive	3		3		
t_h	Hold time data after CLK↑		0		0		ns

6.8 Timing Requirements, V_{CC} = 5 V ± 0.5 V

over recommended operating free-air temperature range (unless otherwise noted)

			T_A = 25°C		SN74LV174A		UNIT
			MIN	MAX	MIN	MAX	
t_w	Pulse duration	$\overline{CLR}$ low	5		5		ns
		CLK high or low	5		5		ns
t_{su}	Setup time before CLK↑	Data	4.5		4.5		ns
		$\overline{CLR}$ inactive	2.5		2.5		ns
t_h	Hold time data after CLK↑		0.5		0.5		ns

Copyright © 2023 Texas Instruments Incorporated

6.9 Switching Characteristics, V_{CC} = 2.5 V ± 0.2 V

over recommended operating free-air temperature range (unless otherwise noted)

PARAMETER	FROM (INPUT)	TO (OUTPUT)	LOAD CAPACITANCE	T_A = 25°C			SN74LV174A		UNIT
				MIN	TYP	MAX	MIN	MAX	
f_{max}			C_L = 15 pF	55	115		50		MHz
			C_L = 50pF	45	90		40		
t_{pd}	$\overline{CLR}$	Q	C_L = 15pF		6.3	17.3	1	19.5	ns
	CLK				8.4	17.1	1	19	
t_{pd}	$\overline{CLR}$	Q	C_L = 50 pF		8.2	21.9	1	23.5	ns
	CLK				10.8	20.6	1	23	
$t_{sk(o)}$						2		2	

6.10 Switching Characteristics, V_{CC} = 3.3 V ± 0.3 V

over recommended operating free-air temperature range (unless otherwise noted)

PARAMETER	FROM (INPUT)	TO (OUTPUT)	LOAD CAPACITANCE	T_A = 25°C			SN74LV174A		UNIT
				MIN	TYP	MAX	MIN	MAX	
f_{max}			C_L = 15 pF	95	170		80		MHz
			C_L = 50 pF	55	130		50		
t_{pd}	$\overline{CLR}$	Q	C_L = 15 pF		4.5	11.4	1	13.5	ns
	CLK				5.8	11	1	13	
t_{pd}	$\overline{CLR}$	Q	C_L = 50 pF		6	14.9	1	17	ns
	CLK				7.5	14.5	1	16.5	
$t_{sk(o)}$						1.5		1.5	

6.11 Switching Characteristics, V_{CC} = 5 V ± 0.5 V

over recommended operating free-air temperature range (unless otherwise noted)

PARAMETER	FROM (INPUT)	TO (OUTPUT)	LOAD CAPACITANCE	T_A = 25°C			SN74LV174A		UNIT
				MIN	TYP	MAX	MIN	MAX	
f_{max}			C_L = 15 pF	130	240		110	5	MHz
			C_L = 50 pF	90	180		80		
t_{pd}	$\overline{CLR}$	Q	C_L = 15 pF		3	7.6	1	9	ns
	CLK				4.1	7.2	1	8.5	
t_{pd}	$\overline{CLR}$	Q	C_L = 50 pF		4.2	9.6	1	11	ns
	CLK				5.5	9.2	1	10.5	
$t_{sk(o)}$						1		1	

6.12 Noise Characteristics

V_{CC} = 3.3 V, C_L = 50 pF, T_A = 25°C(1)

PARAMETER		SN74LV174A			UNIT
		MIN	TYP	MAX	
$V_{OL(P)}$	Quiet output, maximum dynamic V_{OL}		0.34	0.8	V
$V_{OL(V)}$	Quiet output, minimum dynamic V_{OL}		–0.3	–0.8	V
$V_{OH(V)}$	Quiet output, minimum dynamic V_{OH}		3.02		V
$V_{IH(D)}$	High-level dynamic input voltage	2.31			V
$V_{IL(D)}$	Low-level dynamic input voltage			0.99	V

(1) Characteristics are for surface-mount packages only.

Copyright © 2023 Texas Instruments Incorporated

6.13 Operating Characteristics

T_A = 25°C

PARAMETER		TEST CONDITIONS		V_{CC}	TYP	UNIT
C_{pd}	Power dissipation capacitance	C_L = 50 pF	f = 10 MHz	3.3	14	pF
				5	15.1	

6.14 Typical Characteristics

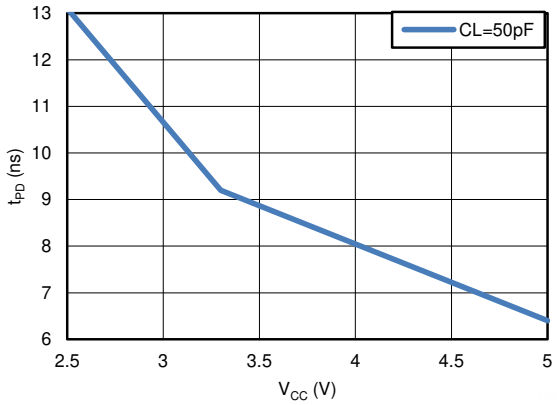

Figure 6-1. TPD vs V_{CC}

7 Parameter Measurement Information

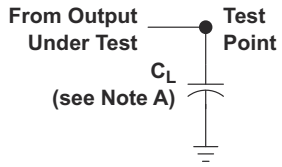

LOAD CIRCUIT FOR
TOTEM-POLE OUTPUTS

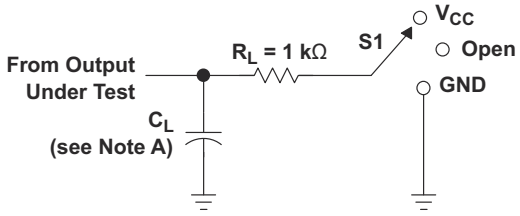

LOAD CIRCUIT FOR
3-STATE AND OPEN-DRAIN OUTPUTS

TEST	S1
t_{PLH}/t_{PHL}	Open
t_{PLZ}/t_{PZL}	V_{CC}
t_{PHZ}/t_{PZH}	GND
Open Drain	V_{CC}

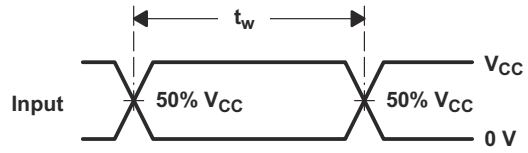

VOLTAGE WAVEFORMS
PULSE DURATION

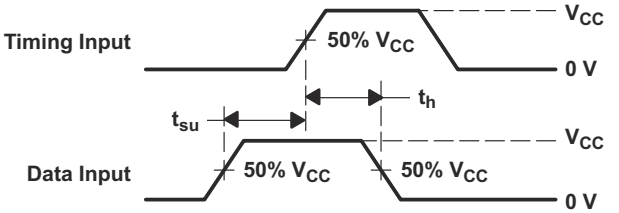

VOLTAGE WAVEFORMS
SETUP AND HOLD TIMES

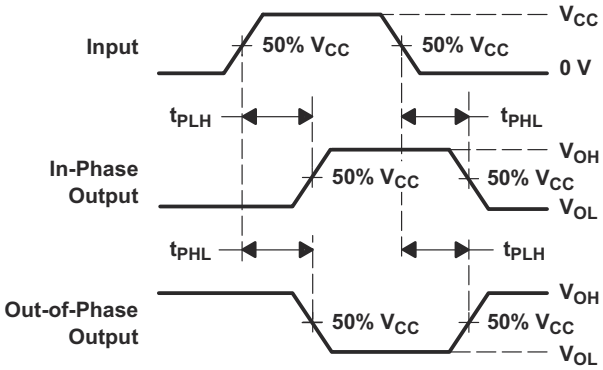

VOLTAGE WAVEFORMS
PROPAGATION DELAY TIMES
INVERTING AND NONINVERTING OUTPUTS

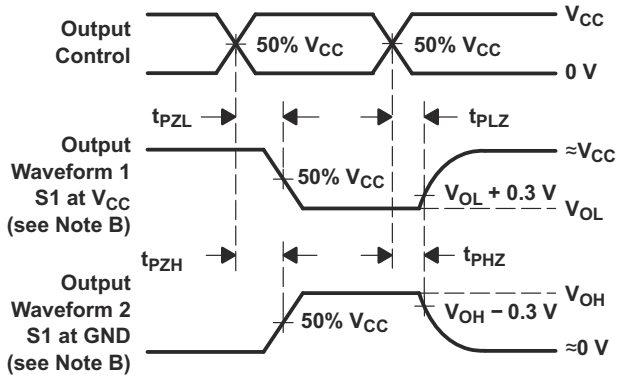

VOLTAGE WAVEFORMS
ENABLE AND DISABLE TIMES
LOW- AND HIGH-LEVEL ENABLING

A. C_L includes probe and jig capacitance.
B. Waveform 1 is for an output with internal conditions such that the output is low, except when disabled by the output control. Waveform 2 is for an output with internal conditions such that the output is high, except when disabled by the output control.
C. All input pulses are supplied by generators having the following characteristics: PRR ≤ 1 MHz, Z_O = 50 Ω, t_r ≤ 3 ns, t_f ≤ 3 ns.
D. The outputs are measured one at a time, with one input transition per measurement.
E. t_{PLZ} and t_{PHZ} are the same as t_{dis}.
F. t_{PZL} and t_{PZH} are the same as t_{en}.
G. t_{PHL} and t_{PLH} are the same as t_{pd}.
H. All parameters and waveforms are not applicable to all devices.

Figure 7-1. Load Circuit and Voltage Waveforms

Copyright © 2023 Texas Instruments Incorporated

8 Detailed Description

8.1 Overview

The 'LV174A devices are positive-edge-triggered flip-flops with a direct clear (CLR) input. Information at the data (D) inputs meeting the setup time requirements is transferred to the outputs on the positive-going edge of the clock pulse. Clock triggering occurs at a particular voltage level and is not directly related to the transition time of the positive-going edge of the clock pulse. When the clock (CLK) input is at either the high or low level, the D-input signal has no effect at the output.

8.2 Functional Block Diagram

Figure 8-1. Logic Diagram (Positive Logic)

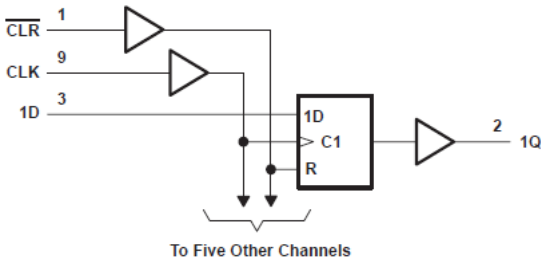

Figure 8-2.

8.3 Feature Description

8.3.1 Balanced CMOS Push-Pull Outputs

This device includes balanced CMOS push-pull outputs. The term *balanced* indicates that the device can sink and source similar currents. The drive capability of this device may create fast edges into light loads, so routing and load conditions should be considered to prevent ringing. Additionally, the outputs of this device are capable of driving larger currents than the device can sustain without being damaged. It is important for the output power of the device to be limited to avoid damage due to overcurrent. The electrical and thermal limits defined in the *Absolute Maximum Ratings* must be followed at all times.

Unused push-pull CMOS outputs should be left disconnected.

8.3.2 Latching Logic

This device includes latching logic circuitry. Latching circuits commonly include D-type latches and D-type flip-flops, but include all logic circuits that act as volatile memory.

When the device is powered on, the state of each latch is unknown. There is no default state for each latch at start-up.

The output state of each latching logic circuit only remains stable as long as power is applied to the device within the supply voltage range specified in the *Recommended Operating Conditions* table.

8.3.3 Partial Power Down (I_{off})

This device includes circuitry to disable all outputs when the supply pin is held at 0 V. When disabled, the outputs will neither source nor sink current, regardless of the input voltages applied. The amount of leakage current at each output is defined by the I_{off} specification in the *Electrical Characteristics* table.

8.3.4 Clamp Diode Structure

Figure 8-3 shows the inputs and outputs to this device have negative clamping diodes only.

CAUTION

Voltages beyond the values specified in the *Absolute Maximum Ratings* table can cause damage to the device. The input and output voltage ratings may be exceeded if the input and output clamp-current ratings are observed.

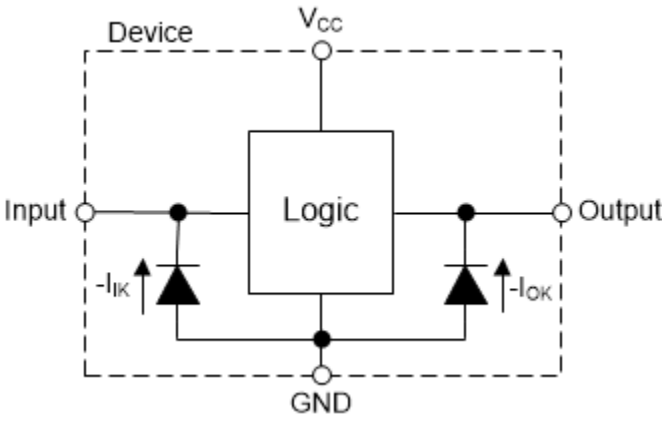

Figure 8-3. Electrical Placement of Clamping Diodes for Each Input and Output

Copyright © 2023 Texas Instruments Incorporated

8.4 Device Functional Modes

Table 8-1. Function Table

INPUTS[1]			OUTPUT
$\overline{CLR}$	CLK	D	Q
L	X	X	L
H	↑	H	H
H	↑	L	L
H	L	X	Qo

(1) H = High Voltage Level, L = Low Voltage Level, X = Do not Care, Z = High Impedance

Copyright © 2023 Texas Instruments Incorporated

9 Application and Implementation

Note

Information in the following applications sections is not part of the TI component specification, and TI does not warrant its accuracy or completeness. TI's customers are responsible for determining suitability of components for their purposes, as well as validating and testing their design implementation to confirm system functionality.

9.1 Application Information

The SN74LV174A is a low-drive CMOS device that can be used for a multitude of bus interface type applications where output ringing is a concern. The low drive and slow edge rates will minimize overshoot and undershoot on the outputs. The inputs are 5-V tolerant allowing for down translation to V_{CC}.

9.2 Typical Application

9.2.1 Application Curves

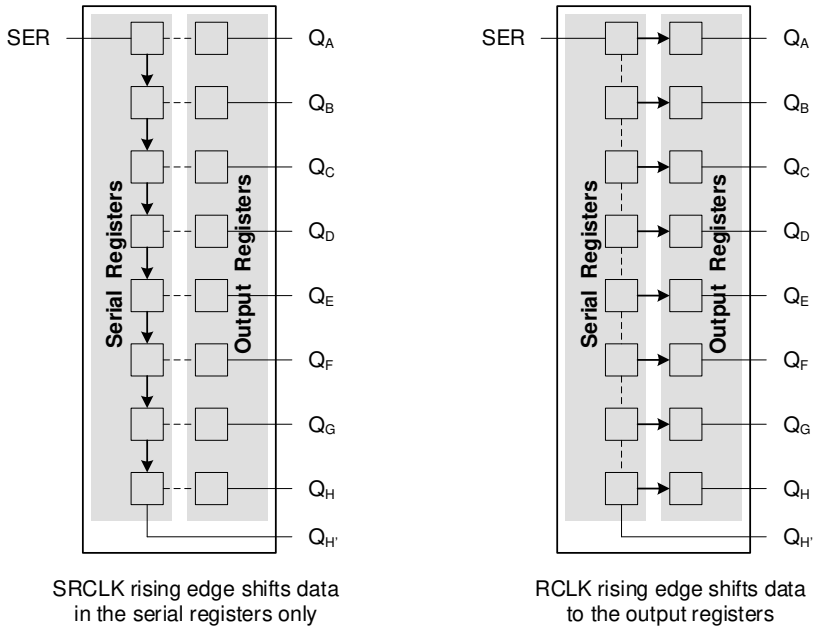

Figure 9-1. Simplified Functional Diagram Showing Clock Operation

9.3 Power Supply Recommendations

The power supply can be any voltage between the min and max supply voltage rating located in Section 6.3.

Each V_{CC} terminal should have a good bypass capacitor to prevent power disturbance. For devices with a single supply, a 0.1 µF capacitor is recommended. If there are multiple V_{CC} terminals then 0.01 µF or 0.022 µF capacitors are recommended for each power terminal. It is ok to parallel multiple bypass capacitors to reject different frequencies of noise. 0.1 µF and 1.0 µF capacitors are commonly used in parallel. The bypass capacitor should be installed as close to the power terminal as possible for the best results.

9.4 Layout

9.4.1 Layout Guidelines

When using multiple bit logic devices, inputs should not float. In many cases, functions or parts of functions of digital logic devices are unused. Some examples are when only two inputs of a triple-input AND gate are used, or when only 3 of the 4-buffer gates are used. Such unused input pins must not be left unconnected because the undefined voltages at the outside connections result in undefined operational states. All unused inputs of

Copyright © 2023 Texas Instruments Incorporated

digital logic devices must be connected to a logic high or logic low voltage, as defined by the input voltage specifications, to prevent them from floating. The logic level that must be applied to any particular unused input depends on the function of the device. Generally, the inputs are tied to GND or VCC, whichever makes more sense for the logic function or is more convenient.

Copyright © 2023 Texas Instruments Incorporated

10 Device and Documentation Support

10.1 Documentation Support

10.1.1 Related Documentation

For related documentation, see the following:

- Texas Instruments, *CMOS Power Consumption and Cpd Calculation* application report
- Texas Instruments, *Thermal Characteristics of Standard Linear and Logic (SLL) Packages and Devices* application report

10.2 Receiving Notification of Documentation Updates

To receive notification of documentation updates, navigate to the device product folder on ti.com. Click on *Subscribe to updates* to register and receive a weekly digest of any product information that has changed. For change details, review the revision history included in any revised document.

10.3 Support Resources

TI E2E™ support forums are an engineer's go-to source for fast, verified answers and design help — straight from the experts. Search existing answers or ask your own question to get the quick design help you need.

Linked content is provided "AS IS" by the respective contributors. They do not constitute TI specifications and do not necessarily reflect TI's views; see TI's Terms of Use.

10.4 Trademarks

TI E2E™ is a trademark of Texas Instruments.
All trademarks are the property of their respective owners.

10.5 Electrostatic Discharge Caution



This integrated circuit can be damaged by ESD. Texas Instruments recommends that all integrated circuits be handled with appropriate precautions. Failure to observe proper handling and installation procedures can cause damage.

ESD damage can range from subtle performance degradation to complete device failure. Precision integrated circuits may be more susceptible to damage because very small parametric changes could cause the device not to meet its published specifications.

10.6 Glossary

TI Glossary	This glossary lists and explains terms, acronyms, and definitions.

11 Mechanical, Packaging, and Orderable Information

The following pages include mechanical, packaging, and orderable information. This information is the most current data available for the designated devices. This data is subject to change without notice and revision of this document. For browser-based versions of this data sheet, refer to the left-hand navigation.

Copyright © 2023 Texas Instruments Incorporated

PACKAGING INFORMATION

Orderable part number	Status (1)	Material type (2)	Package | Pins	Package qty | Carrier	RoHS (3)	Lead finish/ Ball material (4)	MSL rating/ Peak reflow (5)	Op temp (°C)	Part marking (6)
SN74LV174AD	Obsolete	Production	SOIC (D) | 16	-	-	Call TI	Call TI	-40 to 85	LV174A
SN74LV174ADGVR	Active	Production	TVSOP (DGV) | 16	2000 | LARGE T&R	Yes	NIPDAU	Level-1-260C-UNLIM	-40 to 85	LV174A
SN74LV174ADGVR.A	Active	Production	TVSOP (DGV) | 16	2000 | LARGE T&R	Yes	NIPDAU	Level-1-260C-UNLIM	-40 to 85	LV174A
SN74LV174ADR	Active	Production	SOIC (D) | 16	2500 | LARGE T&R	Yes	NIPDAU	Level-1-260C-UNLIM	-40 to 85	LV174A
SN74LV174ADR.A	Active	Production	SOIC (D) | 16	2500 | LARGE T&R	Yes	NIPDAU	Level-1-260C-UNLIM	-40 to 85	LV174A
SN74LV174ANSR	Active	Production	SOP (NS) | 16	2000 | LARGE T&R	Yes	NIPDAU	Level-1-260C-UNLIM	-40 to 85	74LV174A
SN74LV174ANSR.A	Active	Production	SOP (NS) | 16	2000 | LARGE T&R	Yes	NIPDAU	Level-1-260C-UNLIM	-40 to 85	74LV174A
SN74LV174APW	Obsolete	Production	TSSOP (PW) | 16	-	-	Call TI	Call TI	-40 to 85	LV174A
SN74LV174APWR	Active	Production	TSSOP (PW) | 16	2000 | LARGE T&R	Yes	NIPDAU | SN	Level-1-260C-UNLIM	-40 to 85	LV174A
SN74LV174APWR.A	Active	Production	TSSOP (PW) | 16	2000 | LARGE T&R	Yes	NIPDAU	Level-1-260C-UNLIM	-40 to 85	LV174A
SN74LV174APWRG4	Active	Production	TSSOP (PW) | 16	2000 | LARGE T&R	Yes	NIPDAU	Level-1-260C-UNLIM	-40 to 85	LV174A

(1) **Status:** For more details on status, see our product life cycle.

(2) **Material type:** When designated, preproduction parts are prototypes/experimental devices, and are not yet approved or released for full production. Testing and final process, including without limitation quality assurance, reliability performance testing, and/or process qualification, may not yet be complete, and this item is subject to further changes or possible discontinuation. If available for ordering, purchases will be subject to an additional waiver at checkout, and are intended for early internal evaluation purposes only. These items are sold without warranties of any kind.

(3) **RoHS values:** Yes, No, RoHS Exempt. See the TI RoHS Statement for additional information and value definition.

(4) **Lead finish/Ball material:** Parts may have multiple material finish options. Finish options are separated by a vertical ruled line. Lead finish/Ball material values may wrap to two lines if the finish value exceeds the maximum column width.

(5) **MSL rating/Peak reflow:** The moisture sensitivity level ratings and peak solder (reflow) temperatures. In the event that a part has multiple moisture sensitivity ratings, only the lowest level per JEDEC standards is shown. Refer to the shipping label for the actual reflow temperature that will be used to mount the part to the printed circuit board.

(6) **Part marking:** There may be an additional marking, which relates to the logo, the lot trace code information, or the environmental category of the part.

Multiple part markings will be inside parentheses. Only one part marking contained in parentheses and separated by a "~" will appear on a part. If a line is indented then it is a continuation of the previous line and the two combined represent the entire part marking for that device.

Important Information and Disclaimer: The information provided on this page represents TI's knowledge and belief as of the date that it is provided. TI bases its knowledge and belief on information provided by third parties, and makes no representation or warranty as to the accuracy of such information. Efforts are underway to better integrate information from third parties. TI has taken and continues to take reasonable steps to provide representative and accurate information but may not have conducted destructive testing or chemical analysis on incoming materials and chemicals. TI and TI suppliers consider certain information to be proprietary, and thus CAS numbers and other limited information may not be available for release.

In no event shall TI's liability arising out of such information exceed the total purchase price of the TI part(s) at issue in this document sold by TI to Customer on an annual basis.

TAPE AND REEL INFORMATION

REEL DIMENSIONS

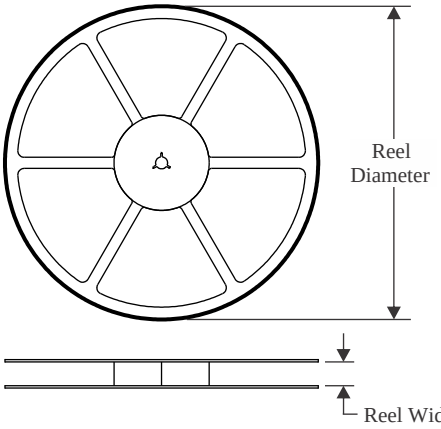

TAPE DIMENSIONS

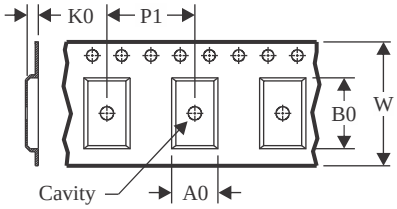

A0	Dimension designed to accommodate the component width
B0	Dimension designed to accommodate the component length
K0	Dimension designed to accommodate the component thickness
W	Overall width of the carrier tape
P1	Pitch between successive cavity centers

QUADRANT ASSIGNMENTS FOR PIN 1 ORIENTATION IN TAPE

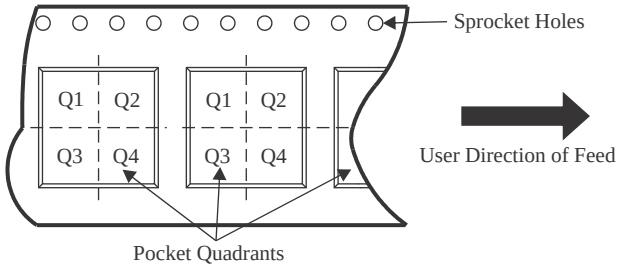

*All dimensions are nominal

Device	Package Type	Package Drawing	Pins	SPQ	Reel Diameter (mm)	Reel Width W1 (mm)	A0 (mm)	B0 (mm)	K0 (mm)	P1 (mm)	W (mm)	Pin1 Quadrant
SN74LV174ADGVR	TVSOP	DGV	16	2000	330.0	12.4	6.8	4.0	1.6	8.0	12.0	Q1
SN74LV174ADR	SOIC	D	16	2500	330.0	12.4	3.75	3.75	1.15	8.0	12.0	Q1
SN74LV174ADR	SOIC	D	16	2500	330.0	16.4	6.5	10.3	2.1	8.0	16.0	Q1
SN74LV174ANSR	SOP	NS	16	2000	330.0	16.4	8.1	10.4	2.5	12.0	16.0	Q1
SN74LV174APWR	TSSOP	PW	16	2000	330.0	12.4	6.9	5.3	1.6	8.0	12.0	Q1
SN74LV174APWR	TSSOP	PW	16	2000	330.0	12.4	6.9	5.6	1.6	8.0	12.0	Q1
SN74LV174APWRG4	TSSOP	PW	16	2000	330.0	12.4	6.9	5.6	1.6	8.0	12.0	Q1

TAPE AND REEL BOX DIMENSIONS

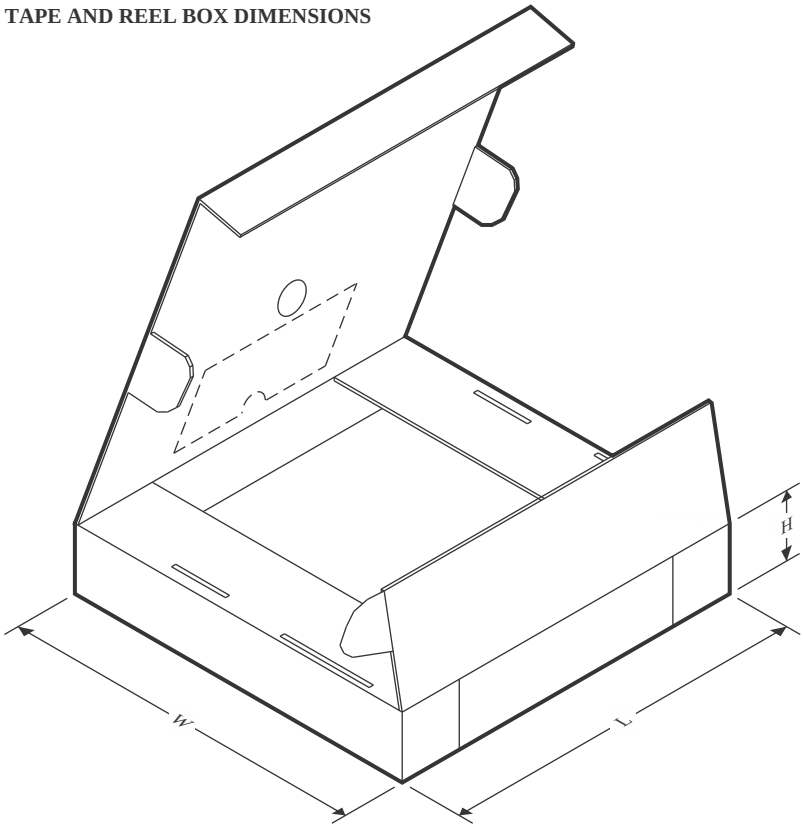

*All dimensions are nominal

Device	Package Type	Package Drawing	Pins	SPQ	Length (mm)	Width (mm)	Height (mm)
SN74LV174ADGVR	TVSOP	DGV	16	2000	353.0	353.0	32.0
SN74LV174ADR	SOIC	D	16	2500	340.5	336.1	32.0
SN74LV174ADR	SOIC	D	16	2500	353.0	353.0	32.0
SN74LV174ANSR	SOP	NS	16	2000	353.0	353.0	32.0
SN74LV174APWR	TSSOP	PW	16	2000	367.0	367.0	35.0
SN74LV174APWR	TSSOP	PW	16	2000	356.0	356.0	35.0
SN74LV174APWRG4	TSSOP	PW	16	2000	356.0	356.0	35.0

DGV (R-PDSO-G)** **PLASTIC SMALL-OUTLINE**

24 PINS SHOWN

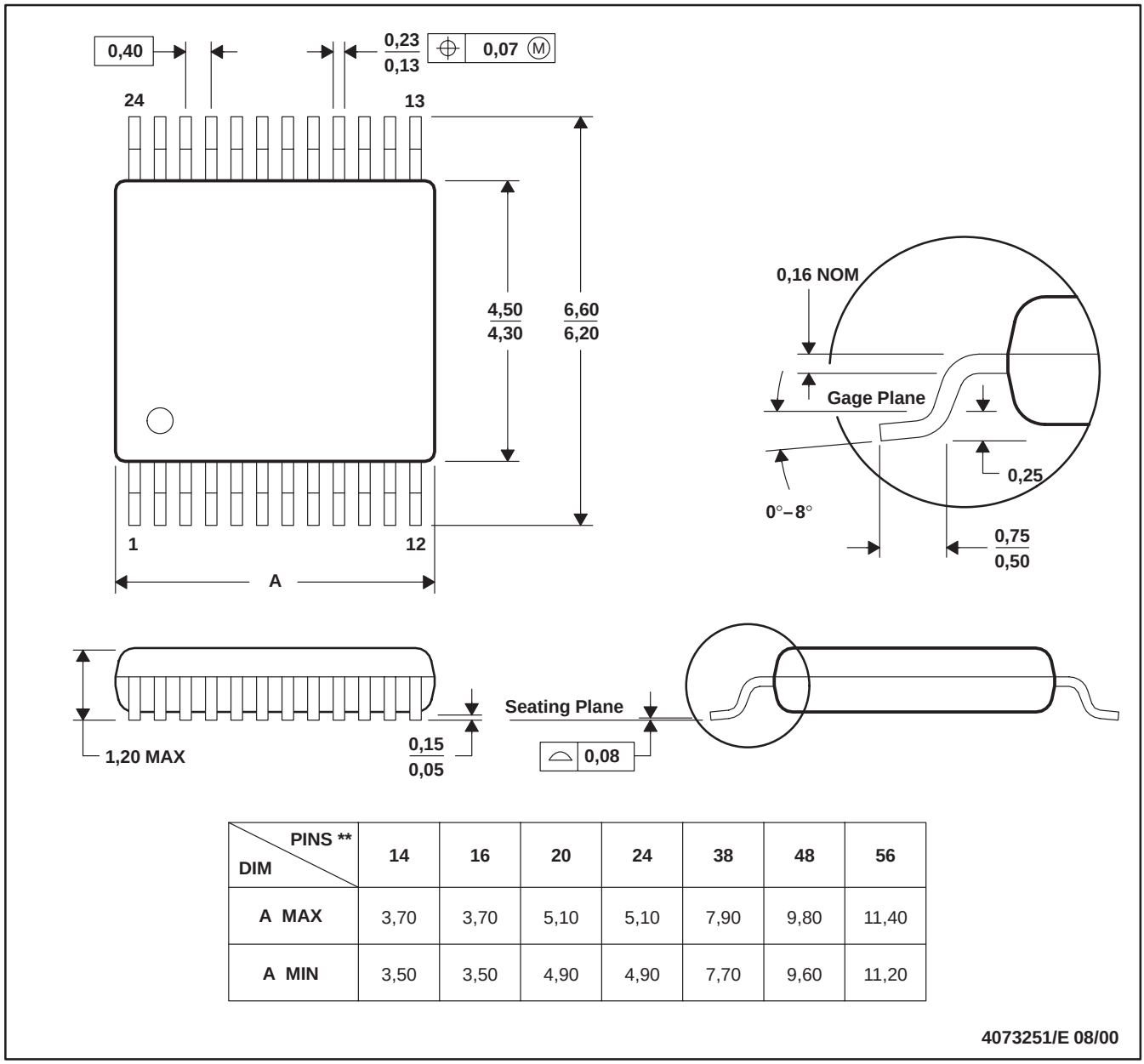

DIM \ PINS **	14	16	20	24	38	48	56
A MAX	3,70	3,70	5,10	5,10	7,90	9,80	11,40
A MIN	3,50	3,50	4,90	4,90	7,70	9,60	11,20

4073251/E 08/00

NOTES: A. All linear dimensions are in millimeters.
B. This drawing is subject to change without notice.
C. Body dimensions do not include mold flash or protrusion, not to exceed 0,15 per side.
D. Falls within JEDEC: 24/48 Pins – MO-153
14/16/20/56 Pins – MO-194

PACKAGE OUTLINE

PW0016A

TSSOP - 1.2 mm max height

SMALL OUTLINE PACKAGE

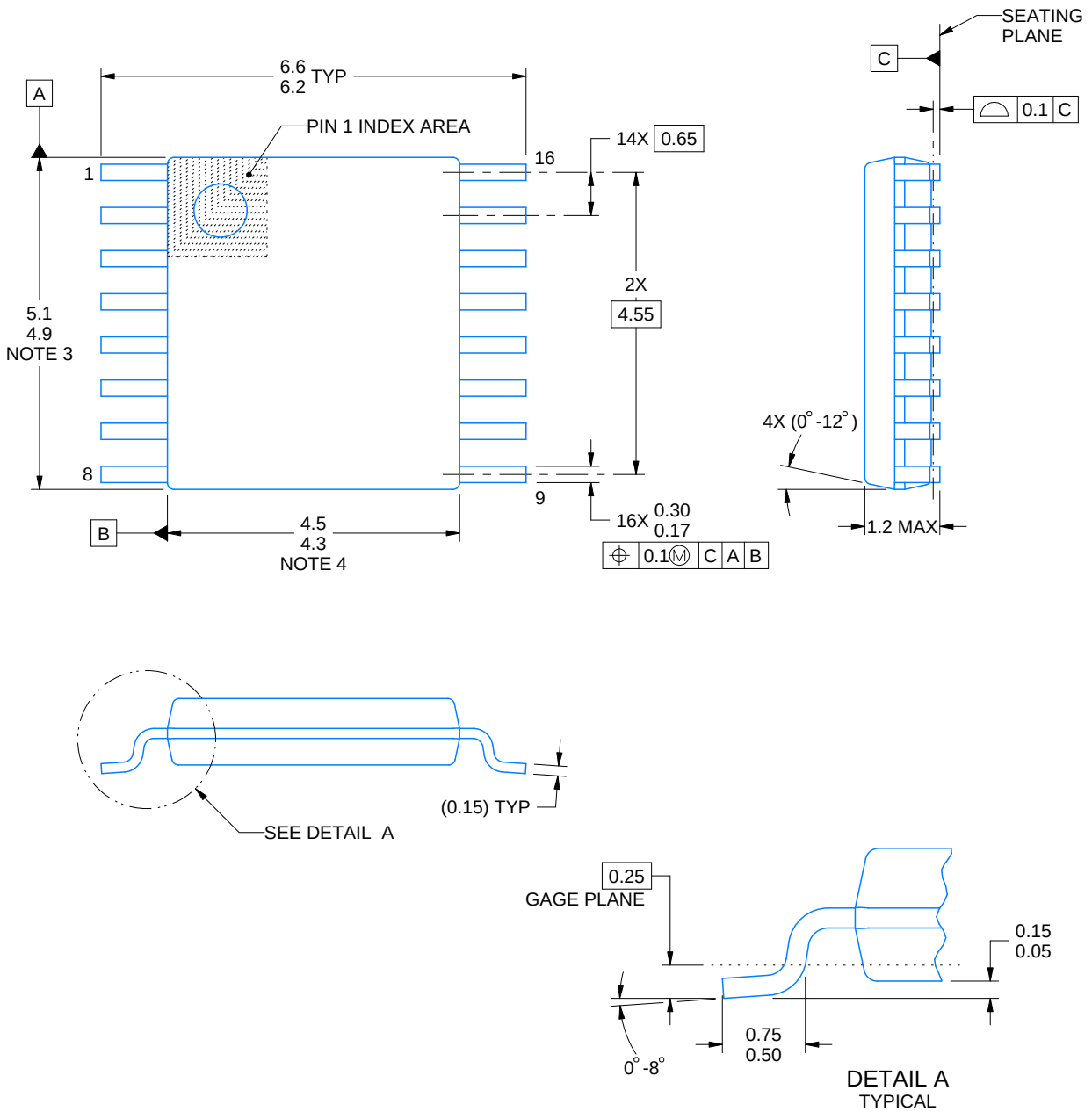

NOTES:

1. All linear dimensions are in millimeters. Any dimensions in parenthesis are for reference only. Dimensioning and tolerancing per ASME Y14.5M.
2. This drawing is subject to change without notice.
3. This dimension does not include mold flash, protrusions, or gate burrs. Mold flash, protrusions, or gate burrs shall not exceed 0.15 mm per side.
4. This dimension does not include interlead flash. Interlead flash shall not exceed 0.25 mm per side.
5. Reference JEDEC registration MO-153.

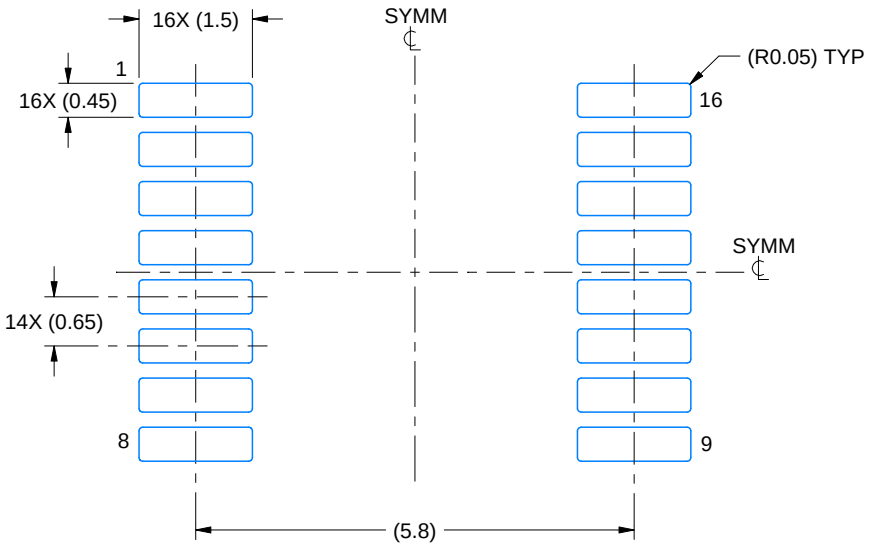

LAND PATTERN EXAMPLE
EXPOSED METAL SHOWN
SCALE: 10X



SOLDER MASK DETAILS

4220204/B 12/2023

NOTES: (continued)

6. Publication IPC-7351 may have alternate designs.
7. Solder mask tolerances between and around signal pads can vary based on board fabrication site.

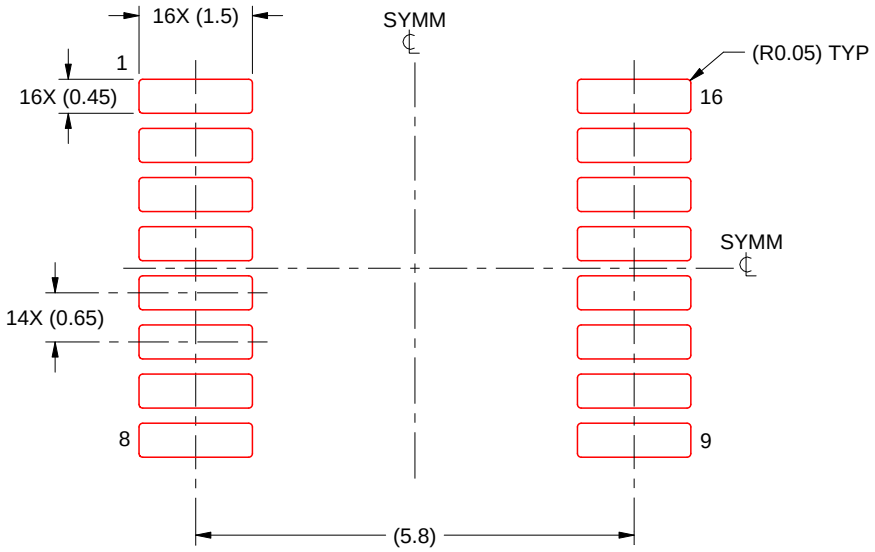

SOLDER PASTE EXAMPLE
BASED ON 0.125 mm THICK STENCIL
SCALE: 10X

4220204/B 12/2023

NOTES: (continued)

8. Laser cutting apertures with trapezoidal walls and rounded corners may offer better paste release. IPC-7525 may have alternate design recommendations.
9. Board assembly site may have different recommendations for stencil design.

D (R–PDSO–G16) PLASTIC SMALL OUTLINE

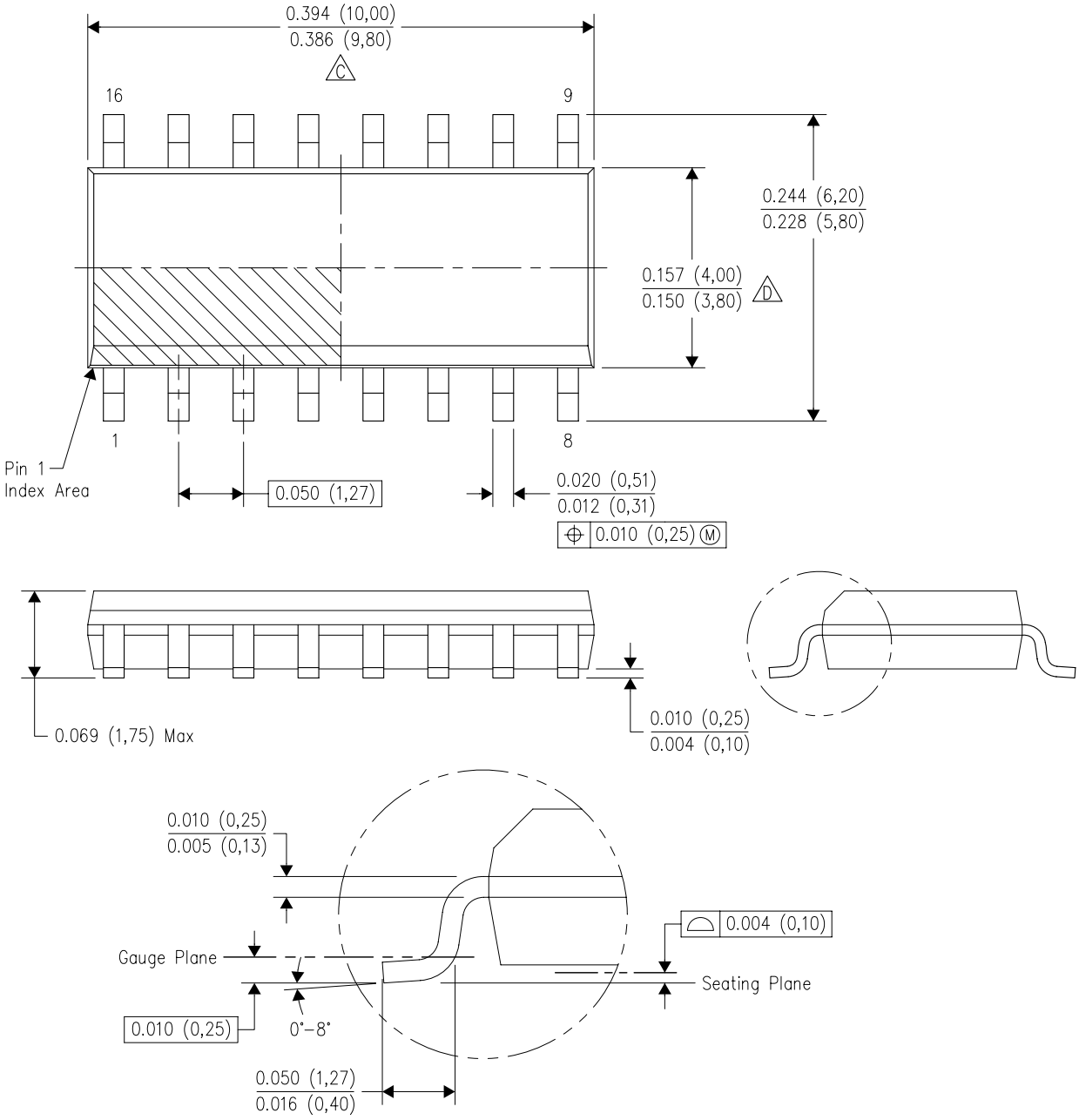

NOTES:
A. All linear dimensions are in inches (millimeters).
B. This drawing is subject to change without notice.
C. Body length does not include mold flash, protrusions, or gate burrs. Mold flash, protrusions, or gate burrs shall not exceed 0.006 (0,15) each side.
D. Body width does not include interlead flash. Interlead flash shall not exceed 0.017 (0,43) each side.
E. Reference JEDEC MS–012 variation AC.

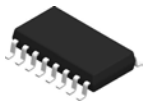

PACKAGE OUTLINE

NS0016A

SOP - 2.00 mm max height

SOP

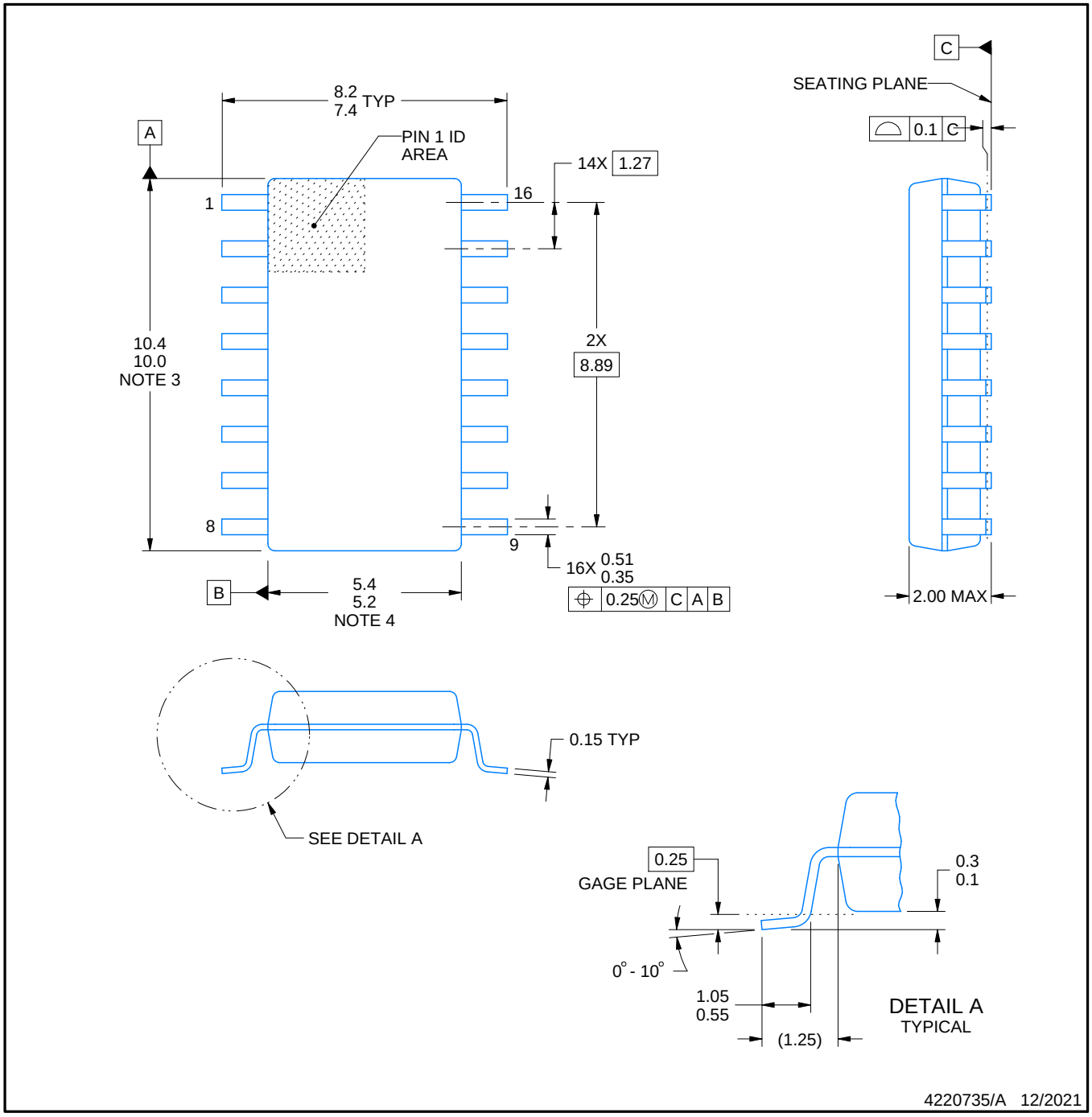

NOTES:

1. All linear dimensions are in millimeters. Dimensions in parenthesis are for reference only. Dimensioning and tolerancing per ASME Y14.5M.
2. This drawing is subject to change without notice.
3. This dimension does not include mold flash, protrusions, or gate burrs. Mold flash, protrusions, or gate burrs shall not exceed 0.15 mm, per side.
4. This dimension does not include interlead flash. Interlead flash shall not exceed 0.25 mm, per side.

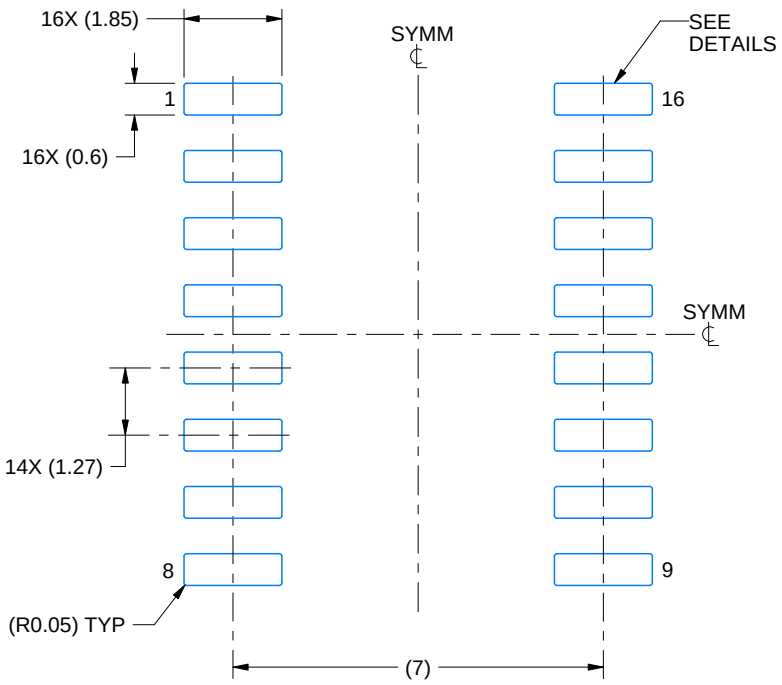

LAND PATTERN EXAMPLE
SCALE:7X

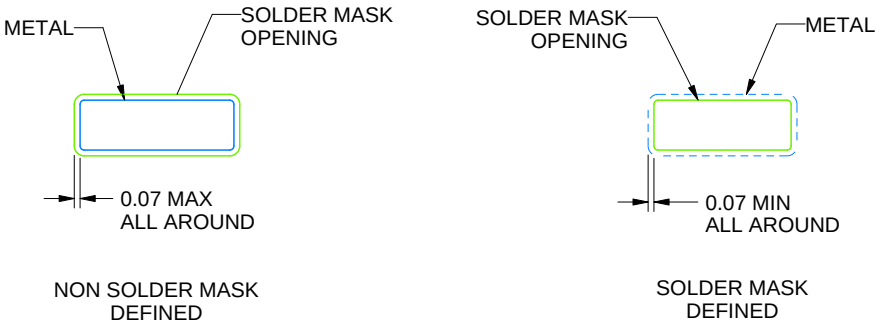

NON SOLDER MASK
DEFINED

SOLDER MASK
DEFINED

SOLDER MASK DETAILS

4220735/A 12/2021

NOTES: (continued)

5. Publication IPC-7351 may have alternate designs.
6. Solder mask tolerances between and around signal pads can vary based on board fabrication site.

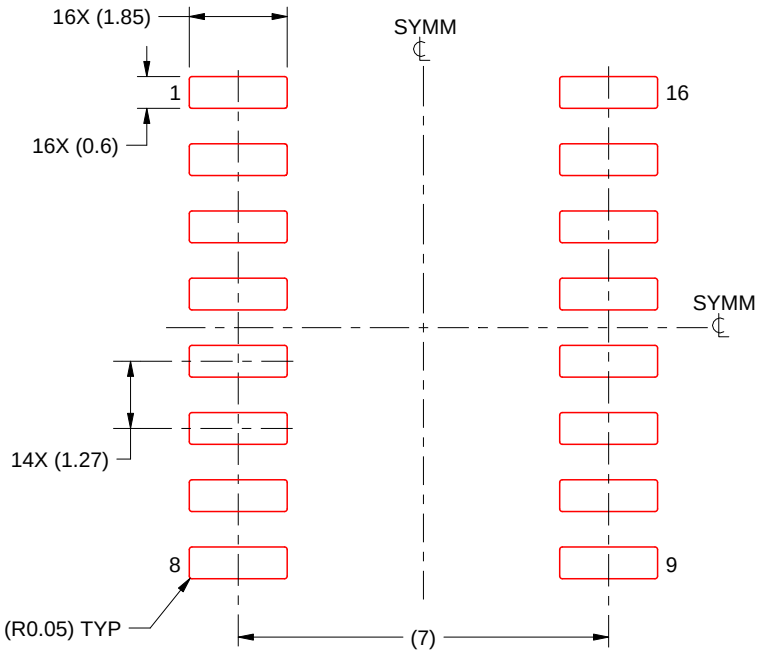

SOLDER PASTE EXAMPLE
BASED ON 0.125 mm THICK STENCIL
SCALE:7X

4220735/A 12/2021

NOTES: (continued)

7. Laser cutting apertures with trapezoidal walls and rounded corners may offer better paste release. IPC-7525 may have alternate design recommendations.
8. Board assembly site may have different recommendations for stencil design.

IMPORTANT NOTICE AND DISCLAIMER

TI PROVIDES TECHNICAL AND RELIABILITY DATA (INCLUDING DATASHEETS), DESIGN RESOURCES (INCLUDING REFERENCE DESIGNS), APPLICATION OR OTHER DESIGN ADVICE, WEB TOOLS, SAFETY INFORMATION, AND OTHER RESOURCES “AS IS” AND WITH ALL FAULTS, AND DISCLAIMS ALL WARRANTIES, EXPRESS AND IMPLIED, INCLUDING WITHOUT LIMITATION ANY IMPLIED WARRANTIES OF MERCHANTABILITY, FITNESS FOR A PARTICULAR PURPOSE OR NON-INFRINGEMENT OF THIRD PARTY INTELLECTUAL PROPERTY RIGHTS.

These resources are intended for skilled developers designing with TI products. You are solely responsible for (1) selecting the appropriate TI products for your application, (2) designing, validating and testing your application, and (3) ensuring your application meets applicable standards, and any other safety, security, regulatory or other requirements.

These resources are subject to change without notice. TI grants you permission to use these resources only for development of an application that uses the TI products described in the resource. Other reproduction and display of these resources is prohibited. No license is granted to any other TI intellectual property right or to any third party intellectual property right. TI disclaims responsibility for, and you fully indemnify TI and its representatives against any claims, damages, costs, losses, and liabilities arising out of your use of these resources.

TI’s products are provided subject to TI’s Terms of Sale, TI’s General Quality Guidelines, or other applicable terms available either on ti.com or provided in conjunction with such TI products. TI’s provision of these resources does not expand or otherwise alter TI’s applicable warranties or warranty disclaimers for TI products. Unless TI explicitly designates a product as custom or customer-specified, TI products are standard, catalog, general purpose devices.

TI objects to and rejects any additional or different terms you may propose.

Copyright © 2026, Texas Instruments Incorporated

Last updated 10/2025