FOR-1754 Rev.1.1

未注公差/General tolerances(mm)														
0~3	>3~6	>6~10	>10~18	>18~30	>30~50	>50~80	>80~120	>120~180	>180~250	>250~315	>315~400	>400~500	>500	0.1/10
±0.12	±0.18	±0.22	±0.26	±0.31	±0.37	±0.57	±0.80	±0.93	±1.05	±1.15	±1.60	±2.20	±2.50	±2°



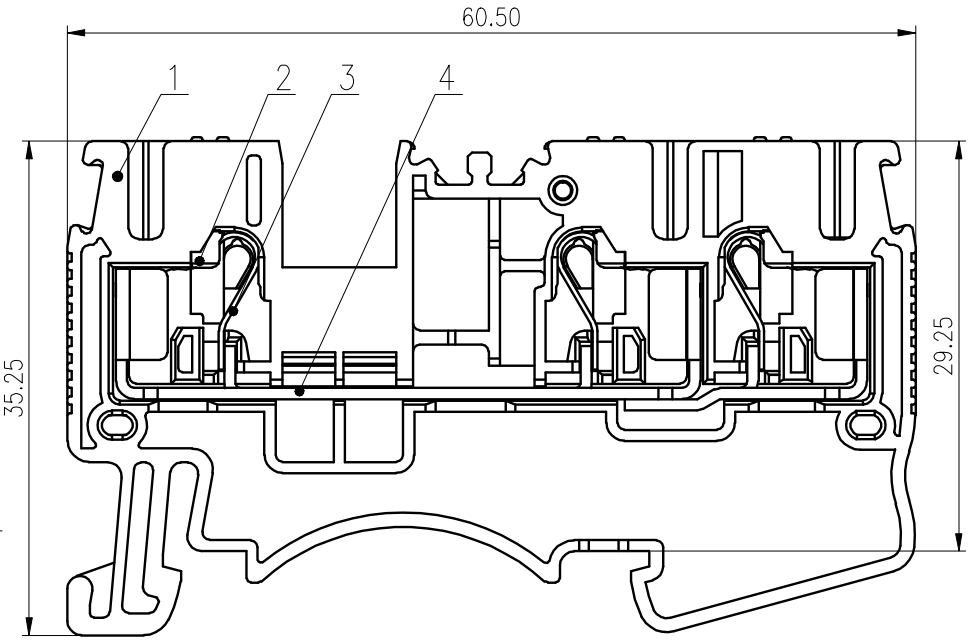

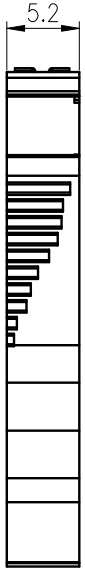

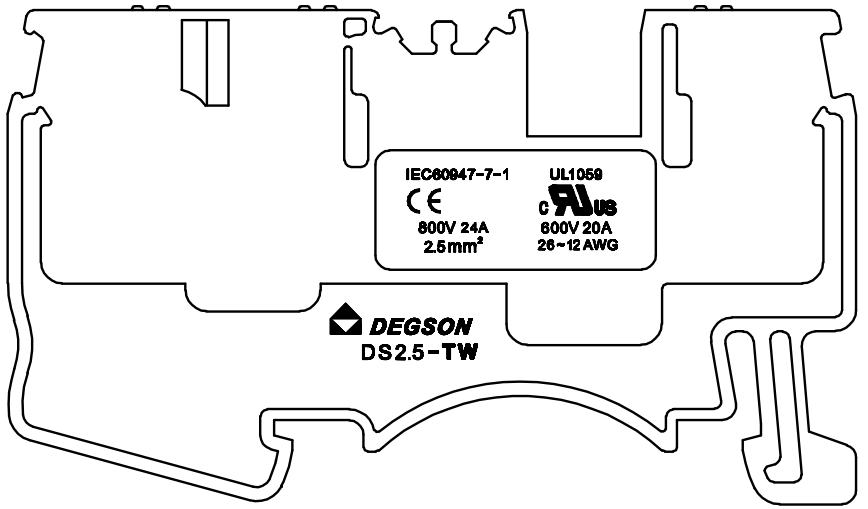

UL 标准/UL Standard:	B	C	D
额定电压/电流/Rated Voltage(V)/Current(A)	600/20	600/20	600/5
IEC 标准/IEC Standard:			
过压类别/Overvoltage Category/污染等级/Pollution Degree	Ⅲ/3	/	/
额定电压/电流/Rated Voltage(V)/Current(A)	800/24	/	/
额定脉冲电压(KV)/Rate Impulse Voltage(KV)	8.0	/	/
线径范围(硬线和软线)/Wire Range(rigid and flexible)(mm²/AWG)	0.2~2.5&4(SOL)/ 26~12		
间距/Pitch(mm)	5.2		
剥线长度/Stripping length(mm)	10-12		
使用温度范围/Operating temperature(°C)	-40~+105		
符合RoHS环保要求/Conform to RoHS	Yes		
标准颜色编号/Standard color number: PANTONE / RAL	/		

ITEM	NAME OF PART	MATERIAL	NOTES
4	Current carrier	Copper	Sn Plated
3	Spring	Stainless steel	
2	Button	PA66-GF	UL94V-0
1	Housing	PA66	UL94V-0

REV	ECN	DESCRIPTION	DRFT	DATE

MATERIAL: / SURFACE: /

MAT NO.: /

STATUS: /

APPD: Li GL 2020.04.02

CHKD: Mao J 2020.04.02

DRFT: Huangs 2019.09.19

SIZE: A4 mm (inch)

DEGSON®

宁波高松电子有限公司
NINGBO DEGSON ELECTRICAL CO., LTD

NAME: DS2.5-TW-01P-1Y-00A(H)

DRAWING NO.: DS2.5-TW-C01 REV T1

TYPE: CUSTOMER DRAWING SCALE: 2:1 SHEET 1/1