| 未注公差/General tolerances(mm) | | | | | | | | | | | | | | |
|---|---|---|---|---|---|---|---|---|---|---|---|---|---|---|
| 0~3 | >3~6 | >6~10 | >10~18 | >18~30 | >30~50 | >50~80 | >80~120 | >120~180 | >180~250 | >250~315 | >315~400 | >400~500 | >500 | 0.1/10 |
| ±0.12 | ±0.18 | ±0.22 | ±0.26 | ±0.31 | ±0.37 | ±0.57 | ±0.80 | ±0.93 | ±1.05 | ±1.15 | ±1.60 | ±2.20 | ±2.50 | ±2° |

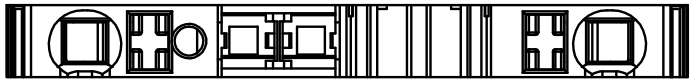

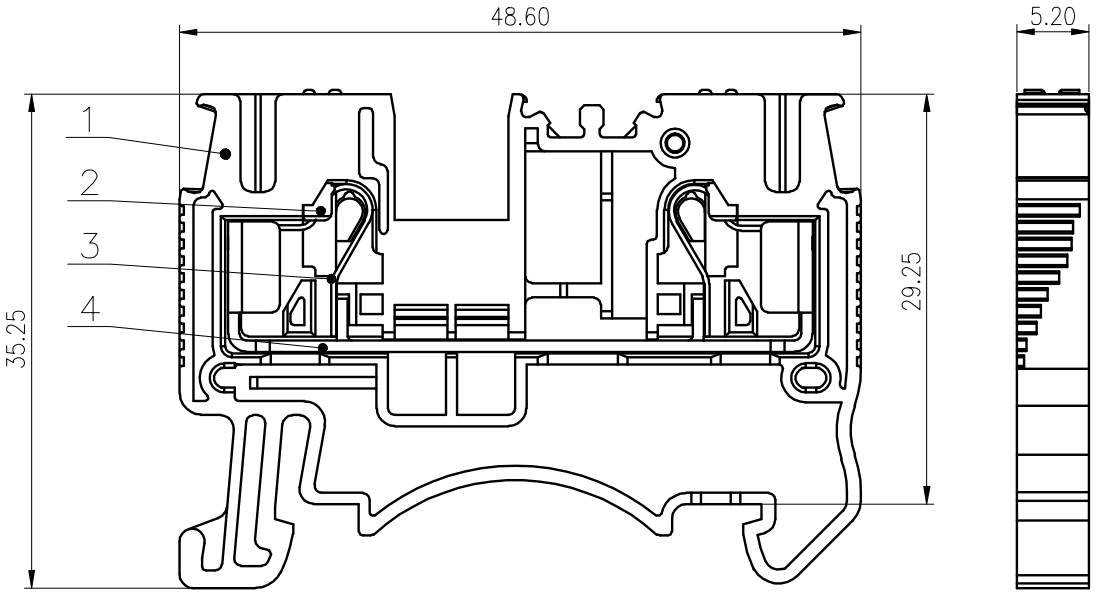


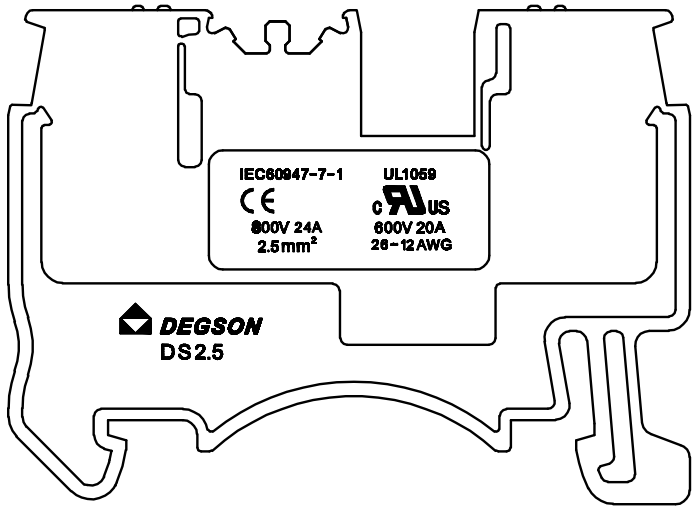


| UL 标准/UL Standard: | B | C | D |
|---|---|---|---|
| 额定电压/电流/Rated Voltage(V)/Current(A) | 600/20 | 600/20 | 600/5 |
| IEC 标准/IEC Standard: | | | |
| 过压类别/Overvoltage Category/污染等级/Pollution Degree | Ⅲ/3 | / | / |
| 额定电压/电流/Rated Voltage(V)/Current(A) | 800/24 | / | / |
| 额定脉冲电压(KV)/Rate Impulse Voltage(KV) | 8.0 | | |
| 线径范围(硬线和软线)/Wire Range(rigid and flexible)(mm²/AWG) | 0.2~2.5&4(SOL)/ 26~12 | | |
| 间距/Pitch(mm) | 5.2 | | |
| 剥线长度/Stripping length(mm) | 10-12 | | |
| 使用温度范围/Operating temperature(°C) | -40~+105 | | |
| 符合RoHS环保要求/Conform to RoHS | Yes | | |
| 标准颜色编号/Standard color number: PANTONE / RAL | / | | |

| ITEM | NAME OF PART | MATERIAL | NOTES |
|---|---|---|---|
| 4 | Current carrier | Copper | Sn Plated |
| 3 | Spring | Stainless steel | |
| 2 | Button | PA66-GF | UL94V-0 |
| 1 | Housing | PA66 | UL94V-0 |

| REV | ECN | DESCRIPTION | DRFT | DATE |
|---|---|---|---|---|

MATERIAL: / SURFACE: /

MAT NO.: /

STATUS: /

APPD: Li GL 2020.04.02

CHKD: Mao J 2020.04.02

DRFT: Wang LX 2020.04.02

SIZE: A4 mm (inch)

DEGSON®

宁波高松电子有限公司
NINGBO DEGSON ELECTRICAL CO., LTD

NAME: DS2.5-01P-1Y-00A(H)

DRAWING NO.: DS2.5-C01 REV T1

TYPE: CUSTOMER DRAWING SCALE: 2:1 SHEET 1/1