# TECHNICAL SPECIFICATION

## Super Pulse Battery Capacitor

外发文件
外发编号:FAT-W-20251223027
受控文件

## Model：SPC1550

Established date: 30 November,2023

| | Position | Signature |
|---|---|---|
| Draft | Product Engineer | Liu Shao ping |
| Checked | Technical Manager | Zhu Zhi gang |
| Approved | Chief Engineer | Liu Peng |

| Customer signature |
|---|
| Company name : |
| Approved by : |
| Signature date : |

WUHAN FANSO TECHNOLOGY CO.,LTD.
Floor 2, Building 3, Jiahua Technology Industrial Park, No. 270, Huangjinkou Three Village, Hanyang District, Wuhan City, China
Postal Code：434000 Tel：027-84453199

FANSO Confidential information, no spreading without permission

# Version Record

| Version | Reviser | Established Date | Version | Revise page | Revised reason |
|---|---|---|---|---|---|
| 0 | Zhang Peng | 2021.09.28 | A/0 | all | Release |
| 1 | Liu Shaoping | 2023.11.29 | A1 | all | Increase customer returns; Change the logo； Added the word "confidential" in the footer。 |
| | | | | | |
| | | | | | |
| | | | | | |
| | | | | | |
| | | | | | |
| | | | | | |
| | | | | | |
| | | | | | |
| | | | | | |
| | | | | | |
| | | | | | |
| | | | | | |

## 1. Scope

This specification can be applied in SPC1550 Super Pulse Battery Capacitor to specify the property index, test method, quality control, points for attention, etc.

## 2. Product type

Super Pulse Battery Capacitor

## 3. Battery system characteristics

Table 1 General characteristics

| NO. | Item | Characteristic | Remarks |
|---|---|---|---|
| 1 | Nominal Voltage | $3.64^{+0.03}_{0}$V | |
| 2 | Capacity | 160mAh | 23±3℃,20mA,2.5V cut off |
| 3 | Internal Impedance | ⩽150mΩ | 1kHz |
| 4 | End Voltage | 2.5V | |
| 5 | Max. Charge Voltage | 3.95V | |
| 6 | Max. Charge Current | 100mA | |
| 7 | Max. Dis. Current | 2000mA | 23±3℃ |
| 8 | Max. pulse discharge current | 5000mA | 23±3℃,Pulse 1s |
| 9 | Operating Temperature Range | -40℃~85℃ | |
| 10 | Dimension | Φ15.1mm*H51.0mm | See attached dimension image |
| 11 | Weight | About 7.5g | |

Table 2 Other performances

| NO. | Item | Characteristic | Remarks |
|---|---|---|---|
| 1 | Leak current | ＜3μA | Test method<br>1. long-term storage, with the loss of capacity / time, the resulting value is the leakage current;<br>2. charges the SPC to the standard battery (the voltage difference does not exceed 5 mV before parallel), then combines the SPC and ER in parallel to series a standard resistance above 1 K ohms in the circuit. After the ER and SPC voltage are consistent (about 2 days), test the voltage, leakage current = voltage / resistance. |
| 2 | Leak current at high temperature | ＜15μA | The test method was identical to item 1, where 2 ~ and 5 days were stabilized from room temperature to 85℃. |
| 3 | 60℃ High temperature January capacity retention rate | ⩾ at 70% nominal capacity | 23±3℃,20mA,2.5V cut off |
| 4 | 80℃ High temperature January capacity retention rate | ⩾ at 70% nominal capacity | 23±3℃,20mA,2.5V cut off |
| 5 | Low temperature capacity | ⩾ at 60% nominal capacity | - 10±2℃,After 16h,20mA,2.5V cut off |
| 6 | High temperature capacity | ⩾ at 95% nominal capacity | 55±2℃,After 8h,20mA,2.5V cut off |

## 4 Appearance

SPC1550 appearance, no scratch, swelling, deformation, corrosion, electrolyte leakage and other defects.

## 5 Performance and test conditions

### 5.1 Test conditions and instruments

#### 5.1.1 Standard test conditions

The test shall be performed with capacitors lasting no more than 10 days and, unless otherwise specified, under the following conditions:

temperature:(23±5)℃;

Relative humidity: (65 ± 20)%;

Air pressure: 1.0 atm.

### 5.1.2 Measuring instrument requirements

The Inspection Service Provider shall establish and maintain the test equipment and inspection devices that meet the test and inspection requirements. Its accuracy shall meet the requirements and identified by the measurement department can be used within the validity period.

The accuracy of the instrument for measuring dimensions shall not be any less than 0.01 mm;

The accuracy of measuring voltage meter shall not be less than 0.5 and internal resistance shall be not less than 10kΩ/V;

The accuracy of the instrument used for measuring the weight shall not be any less than 0.05 g;

Current instrument accuracy shall not be less than the 0.5 level;

The measurement principle shall be AC impedance (frequency 1kHz).

## 5.2 Environmental adaptability test items and methods

### 5.2.1 Altitude Simulation

A test Super Pulse Battery Capacitor shall be stored for 6h at an absolute pressure of 11.6KPa(1.68psi) and a temperature of 20±3℃（68±5°F）

Criteria：The samples shall not explode, catch fire or leak.

### 5.2.2 Thermal Cycling

A test Super Pulse Battery Capacitor shall be stored for at least 6h at test temperature of 72℃, followed by storage for at least 6h at temperature of -40℃. The maximum time for transfer to each temperature shall be 30 min. Each test and battery shall undergo this procedure 10 times. This is then followed by storage of at least 24h at ambient temperature.

Criteria：The samples shall not explode, catch fire or leak.

### 5.2.3 Vibration test

A test Super Pulse Battery Capacitor shall be firmly secured to the platform of vibration machine without distorting them and in such a manner as to faithfully transmit the vibration. Battery vibration frequency is to be varied at the rate of 1 hertz per minute between 10 and 55 hertz, and return in not less than 90 or more than 100 minutes. The battery is to be tested in three mutually perpendicular directions .

Criteria：The samples shall not explode, catch fire or leak.

### 5.2.4 Free fall

A test Super Pulse Battery Capacitor shall be dropped from 1.0m height onto a concrete surface. Each test battery shall be dropped six times, a prismatic battery once form each of its six faces.

Criteria：The samples shall not explode or catch fire.

Warning:

The description of the following abuse tests is for demonstration purposes only. During handling and application of lithium batteries, abusive conditions must be avoided. Any application or test requiring performance beyond the limits given hereby must be approved by Fanso.

### 5.3 Safety test

#### 5.3.1 Thermal abuse

A test Super Pulse Battery Capacitor shall be placed in an oven and the temperature raised at a rate of 5℃/min to a temperature of 130℃ at which the battery shall remain for 10 min.

Criteria：Discharge from the relief valve is allowed, but the samples shall not explode or catch fire.

#### 5.3.2 Impact

A test Super Pulse Battery Capacitor is placed on a smooth flat surface. A 5/8 in. (15.8 mm) diameter steel bar was placed across the center of the sample. The length of the bar should be at least as long as the width of the sample. A 9.1±0.1 kg weight is dropped from a height of 24 ± 1 in. (610 ± 25 mm) on to the sample.

Criteria：The samples shall not explode or catch fire.

#### 5.3.3 Crush test

A test Super Pulse Battery Capacitor is crushed between two flat hard surfaces . The crushing was continued until a force of 3000 pounds (13kN±0.78kN) was applied by hydraulic piston with a diameter of 32mm. press continue until pressure reach up to 17.2Mpa. Once the maximum pressure was obtained, it was released.

Criteria：The samples shall not explode or catch fire.

#### 5.3.4 External Short-circuit

The positive and negative sample capacitor is short by copper wire with resistance <0.1Ω at the ambient temperature 23±5℃ until the capacitor catches fire or explodes or until the capacitor is fully discharged to 0.2V, and the housing temperature is relowered to the ambient temperature± 10℃.

Criteria：The samples shall not explode or catch fire.

### 5.3.5 Forced discharge test

At the ambient temperature of 23 ± 5℃, the termination voltage is discharged at 0.2C, and then the capacitor is reverse charged at 1C current, requiring a charging time of not less than 90min.

Criteria：The samples shall not explode or catch fire.

## 6. Ncoming inspection

As for the customer's incoming inspection, FANSO recommended sampling according to GB2828.1-2012 standard.

Table 3 Acceptability quality level

| No | Item | Check level | AQL |
|---|---|---|---|
| 1 | Dimension | S-3 | 0.65 |
| 2 | Appearance | Ⅱ | 0.65 |
| 3 | Open circuit voltage | Ⅱ | 0.4 |
| 4 | Load voltage | Ⅱ | 0.4 |

Table 4 Sampling amount

| Lot size | Sampling amount |
|---|---|
| ≤3200 | 32 |
| 3200～10 000 | 50 |
| ＞10 000 | 80 |

## 7. Storage

Super Pulse Battery Capacitor should be stored in a cool, clean, dry environment, the recommended temperature is ⩽+30℃, relative humidity ⩽60%, should avoid contact with corrosive materials, away from fire and heat.

## 8. Safety terms

8.1 Before use, do not remove the battery from the original packaging.

8.2 Do not scattered placed the capacitor together in order to avoid accidental short circuit.

8.3 Do not heat the capacitor above 100 ℃ or incinerated.

8.4 Do not recharge the capacitor more than 3.95V.

8.5 Do not weld or solder directly to capacitor, should use the capacitor with terminals or wires.

8.6 Do not mix the new and used capacitors or different brand capacitor.

8.7 Do not disassembly or open capacitor.

8.8 Do not short circuit the battery or reversely contact the positive and negative terminals.

8.9 Capacitors can be used in parallel with the power supply, but strict protection measures should be taken to prevent capacitors from countercharging them.

8.10 Do not test environment and safety under extrusion without any protection.

8.11 Do not put the capacitor into the water

## 9. Transportation

Capacitors need to separate battery capacitors during transportation to prevent short circuits, transportation should be packaged with hard packaging paper to prevent falling, falling, damage, and need to prevent goods from collapsing and rain from getting wet.

FANSO Confidential information, no spreading without permission

Transportation mode: air transport, sea transport.

## 10. Statement

If you have any questions on the product specifications, please contact with Wuhan Fanso Technology Co. ltd. Fanso reserves the right to amend the product specification.

## 11.Product mark

Neutral trademark, sprayed with "positive and negative pole logo", "FANSO", "SPC1520", YYMMDD ", etc., including" YYMMDD "represents the date of production (month date), such as September 28,2021, spray as" 210928 ".

## 12. Drawing (unit of size：mm)

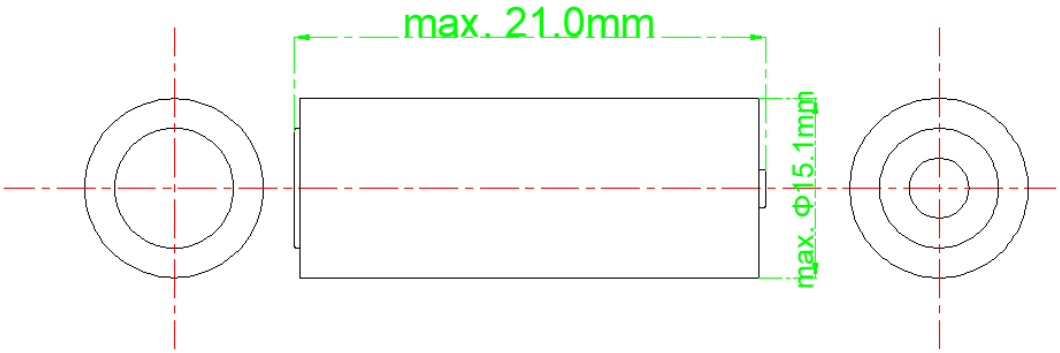


## 13. Note

Any other items which are not covered in this specification shall be agreed by both parties.