Transfer or duplication of this document as well as the utilization or communication of its contents are prohibited unless explicit authorization is granted. Violations will be liable for compensation. All rights reserved for patent, utility model or designs registrations. 除非经书面授权，否则禁止将此文件的内容传播、复制、利用。违者将对由此造成的损失负责任。本公司保留对涉及专利、实用新型和外观专利的所有权利。

PCB LAYOUT

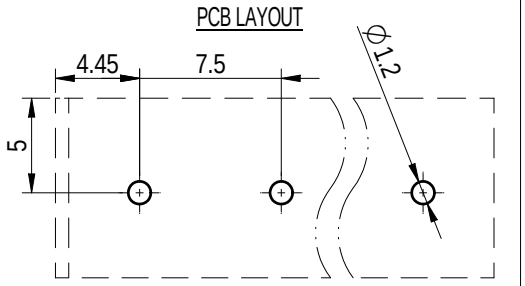

未注公差/General tolerances(mm)														
0~3	>3~6	>6~10	>10~18	>18~30	>30~50	>50~80	>80~120	>120~180	>180~250	>250~315	>315~400	>400~500	>500	0.1/10
±0.12	±0.18	±0.22	±0.26	±0.31	±0.37	±0.57	±0.80	±0.93	±1.05	±1.15	±1.60	±2.20	±2.50	±2°

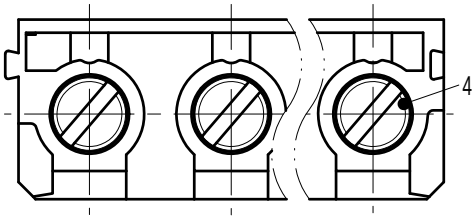

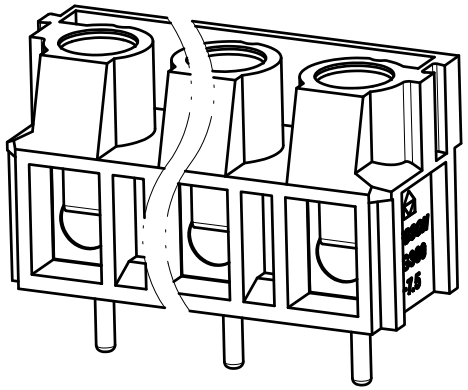

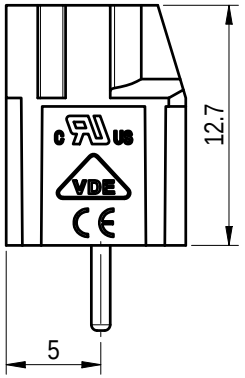

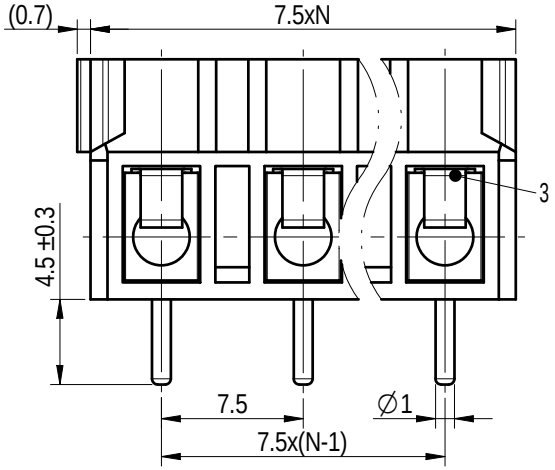

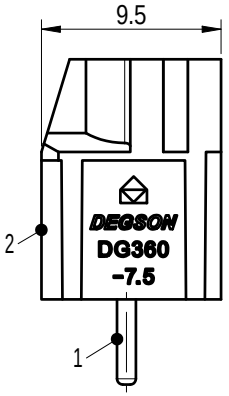

Note:The A&Z(H) in the name means:A(H) and Z(H).

ITEM	NAME OF PART	MATERIAL	NOTES
4	Screw	Steel	M3/Zn plated
3	Spring	Stainless steel	/
2	Housing	PBT	UL94V-0
1	Pin header	Copper alloy	M3/Sn plated

	B	C	D
UL 标准/UL Standard:			
额定电压/电流/Rated Voltage(V)/Current(A)	300/15	/	300/10
IEC 标准/IEC Standard:			
过压类别/Overvoltage Category/污染等级/Pollution Degree	/	III/2	/
额定电压/电流/Rated Voltage(V)/Current(A)	/	450/24	/
工频耐压/Withstanding voltage(V/1Min)	AC2500		
螺丝扭矩/Torque Tightening(N·m/Lb.in)	M3, 0.5/4.43		
线径范围(硬线和软线)/Wire Range(rigid and flexible)(AWG/mm²)	22～14 / 1.0～2.5		
间距/Pitch(mm)/线数范围/Poles	7.5/N=02～16P		
剥线长度/Stripping length(mm)	6～8		
使用温度范围/Operating temperature(°C)	-30～+120		
符合RoHS环保要求/Conform to RoHS	Yes		

DEGSON

APPD:	兰春华	2022.09.28
CHKD:	陈招	2022.09.28
DRFT:	袁路易	2022.09.28

A4 mm (inch)

MATERIAL: -　　SURFACE/COLOR:

MAT NO./REV: - / 00　　MAT STATUS: 批量

NAME

DG360-7.5-XXP-1Y-00A&Z(H)

DRAWING NO.	TYPE	DRAWING STATUS	SCALE	SHEET
200022159	CUSTOMER DRAWING	已发布	2.5:1	1/1

REV	ECN	DESCRIPTION	DRFT	DATE
00			袁路易	2022.09.28